BACKEN ARRIGONI & ROSS, INC.

Architecture, Planning
& Interior Design

1660 Bush Street
San Francisco, CA
94109
Tel: 415-441-4771
Fax: 415-441-8360

Date: March 25, 1991

SHOP DRAWING AND SAMPLE TRANSMITTAL

To: Lance Leininger
Diversified Turnkey Construction

Project Name: Humboldt

Project Number: 8902 7

Submittal Name: Holddown system

BAR Spec. Section File No.: 06100 - [redacted] 1A

Subcontractor and/or Manufacturer: MBR

Contractor's Submittal No.: 3

We are sending:

- ☒ Shop Drawing Prints
- ☒ Shop Drawing Reproducibles
- ☐ Product Literature
- ☐ Samples

Date Rec'd	Items	Description	Action NE	Action MC	Action RR	Date Ret'd
3/13	2	52, 52.1B, 52.1C, 52.1D, 52.4			X	3/25
		Shop Drawings				
3/13	2	8½x11 Product Data/Shop Dwgs.	X			3/25

Review is only for general conformance with the design concept of the project and general compliance with the information given in the Contract Documents. Any action shown is subject to the requirements of the plans and specifications. Contractor is responsible for: dimensions which shall be confirmed and correlated at the job site; fabrication processes and techniques of construction; coordination of his work with that of all other trades; and the satisfactory performance of his work.

REVIEWER'S COMMENTS:

HUMBOLDT STATE UNIVERSITY

MAR 2 8 1991

RECEIVED
PHYSICAL SERVICE

Harland Harris
Ken Combs

cc: George Keating

3/25/91 [signature]

Date Signed

Action Key: NE No Exceptions Taken MC Make Corrections Noted RR Revise & Resubmit

Copies: White: Contractor Yellow: SD Notebook File Blue: SD Submittal File

file:

DIVERSIFIED TURNKEY CONSTRUCTION COMPANY

DIVERSIFIED TURNKEY CONSTRUCTION
SUBMITTAL

To: Backen Arrigoni and Ross, Inc.
Architects
·1660 Bush Street
San Francisco, CA 94109
Attention: Tim Mascheroni

Project: Humboldt State Student Apartments # HU-069(B)

SUBMITTAL No. THREE (3)

DATE: 3-14-91

SPECIFICATION SECTION(S): 06100 PARTIAL

PRODUCT: MBR HOLDDOWN SYSTEM - FRAMING

SUPPLIER/MFG/SUB GRACECO CONSTRUCTION / MBR SYSTEMS

DEVIATION(S) NOTED: MBR HOLDDOWN SYSTEM -
REQUEST APPROVAL AS ALTERNATE HOLDDOWN SYSTEM

We transmit herwith the submittal noted above and related data, with five copies, for your review and approval. Attachments as required are as follow :

Shop Drawings: ✓ (Six each)

Product Data: ✓ (Six each)

Samples: N/A (Four each)

Maintenance Info: N/A (Six each)

Calcs/Certs: ✓ (Six each)

Contractors Stamp:

"It is hereby certified that the (material) (equipment) shown and marked in this submittal, shop drawings, catalog cut(s), etc., and approved/proposed to be incorporated into Contract # _____ is in compliance with the contract drawings and specifications and can be installed in the allocated space, and is _____ approved for use/ _____ submitted for approval."

AUTHORIZED REVIEWER Eric Kazalik DATE 3-14-91

HUMBOLDT STATE UNIVERSITY

MAR 2 8 1991

RECEIVED
PHYSICAL SERVICE

148 E. 30th Street ■ National City, CA 92050 ■ (619) 474-8631 ■ FAX (619) 474-5960

CK'D BY [illegible] DTCC 3/12

SUBMITTAL # 3

MBR SYSTEMS, INC.

RECEIVED MAR 13 1991

ROGERS • LUDKE

BAR

MAR 25 1991

RECEIVED

STRUCTURAL ENGINEER'S REVIEW
X NO EXCEPTIONS TAKEN
__ MAKE CORRECTIONS NOTED
__ REVISE & RESUBMIT
__ NOT REVIEWED

REVIEW IS ONLY FOR CONFORMANCE WITH THE DESIGN CONCEPT OF THE PROJECT AND FOR INFORMATION GIVEN IN THE STRUCTURAL DOCUMENTS. NON-CONFORMITIES AND ERRORS DETECTED [illegible] THIS REVIEW DOES NOT CONSTITUTE APPROVAL OR ACCEPTANCE OF DEVIATIONS FROM CONTRACT DOCUMENTS. SUCH DEVIATIONS, IF ANY, MUST BE REQUESTED BY WRITTEN CORRESPONDENCE IN ACCORDANCE WITH THE CONTRACT DOCUMENTS. CONTRACTOR IS SOLELY RESPONSIBLE FOR: CORRECTNESS OF DIMENSIONS AND QUANTITIES AND FITTING TO OTHER WORK; VERIFICATION OF PHYSICAL INTER-RELATION OF ELEMENTS OF THE WORK FROM PLANS AND SPECIFICATIONS AND IN THE FIELD; FABRICATION PROCEDURES; CONSTRUCTION METHODS, TECHNIQUES AND SEQUENCES. THIS REVIEW DOES NOT RELIEVE THE CONTRACTOR OF THESE RESPONSIBILITIES.

ROGERS • LUDKE

DATE 5.22.91 BY KBC

SHOP DRAWINGS FOR TIE DOWN INSTALLATION

C.S.U. HUMBOLDT ARCATA, CALIFORNIA

FEBRUARY 28, 1991 MBR JOB NO. 90063-TM

BAR

MAR 13 1991

RECEIVED

PAGE NO.	CONTENTS
1	Definitions, abbreviations and parts descriptions.
2	Anchor Bolt layout
3	Typical installation drawings
4	MBR Series 3 Plate Mark and Size
5, 5A	Rod tension installation data. Tension capacities for 1045 cold rolled rods.
6	Allowable offset installation criteria
7, 7A	Controlling value for load capacity, Standard and Custom MBR Tie Down System Assemblies
8-10	Shop drawings for MBR Tie Down System-12 Tie Down Assemblies

REGISTERED PROFESSIONAL ENGINEER
ARTHUR B. RICHARDSON
EXP 6-30-93
No. 18.124
CIVIL
STATE OF CALIFORNIA

Contractor must verify and coordinate scheduled anchor bolts with MBR standard assemblies.

2915 Kerner Blvd., Suite A San Rafael, CA 94901 USA TEL (415) 459-1990 FAX (415) 459-2058

DEFINITIONS, ABBREVIATIONS, AND PARTS DESCRIPTIONS

TDS	**MBR** TDSystem component designation (i.e., TDS 3a).
TDS R5	**MBR** tension transfer rod designation. The number following TDS R (5) represents the rod diameter in 1/8" (i.e., TDS R5 is a 5/8" diameter rod).
TDS C75	**MBR** coupling device for rod to rod connection or foundation bolt to rod connection. The numbers following the TDS C designation are in 1/8" (i.e., TDS C75 is a coupling device from a 7/8" to a 5/8" rod).
TDS 10	Standard **MBR** TDSystem designation for one level condition beginning at the foundation.
TDS 20	Standard **MBR** TDSystem designation for two level condition beginning at the foundation.
TDS 30	Standard **MBR** TDSystem designation for three level condition beginning at the foundation.
TDS 40	Standard **MBR** TDSystem designation for four level condition beginning at the foundation.
TDS 35B	Standard **MBR** TDSystem designation for one, two or three level condition beginning at a beam (the first number represents the number of levels, 1–one level, 2–two levels, 3–three levels, the second number represents the standard condition (1–5).
TDS 3S2	Standard **MBR** TDSystem designation or special conditions. The numbers following the TD represent the number of levels 1–one level, 2–two levels, 3–three levels, 4–four levels, and the number following the S represents the condition number for this designation.
STN	Self Tightening Fastener – A torque–loaded spring–driven nut assembly which continually tightens as shrinkage in wood occurs.
STUD	Denotes minimum required vertical framing for each **MBR** TDSystem assembly. The required reference framing may be part of a standard corner, opening, wall intersection framing or any other standard framing element.

PARTS DESIGNATION FOR VERTICAL ASSEMBLY

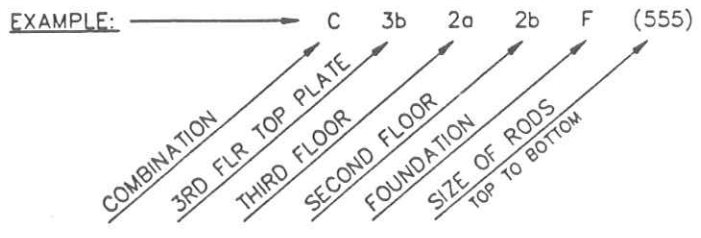

COMPONENTS FROM THE ROOF DOWN.

MBR SYSTEMS, INC.

HUMBOLDT STATE

90063 2-28-91

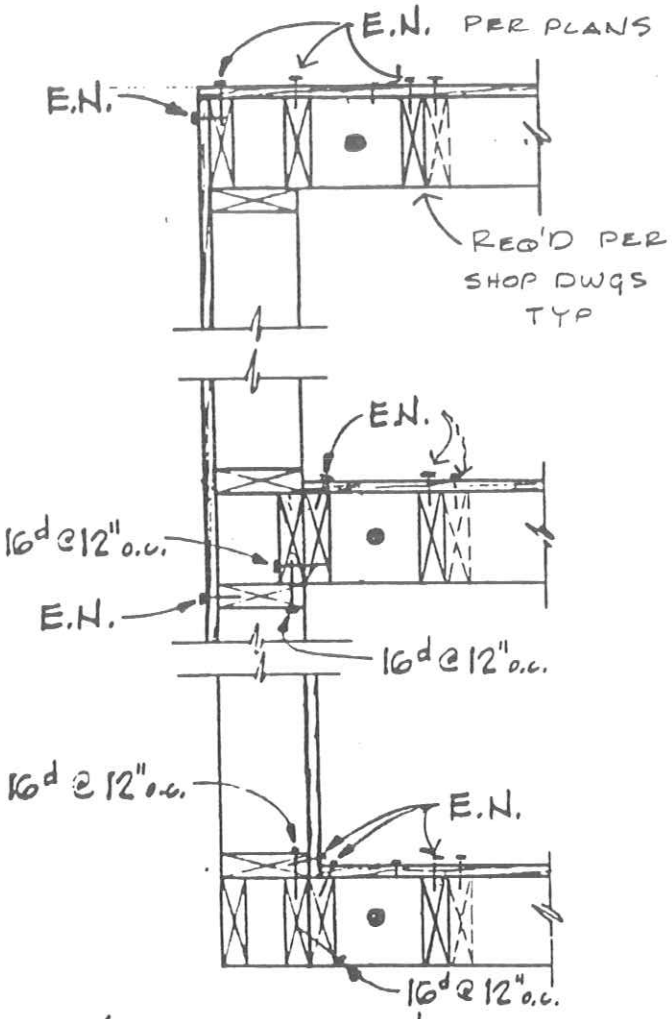

W/ HOLDOWNS

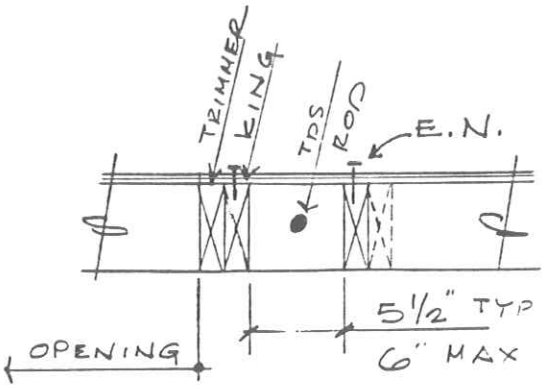

SEE ALSO 4/S1.2

8/S1.2 ALTERNATE

Pg 2

Note: 1. See stud wall schedule on structural sheets and holdown post schedule on S1.2 for wall thickness.
2. All rods are 120 ksi-1045 steel with double plate washers typical.
3. Studs shown at lowest level are underpinning (typical.)

2915 Kerner Blvd., Suite A San Rafael, CA 94901 USA TEL (415) 459-1990 FAX (415) 459-2058

REV NOTE (2): ALL WASHERS ARE PL 3/16 x 2 x 1 5/8 W/ HOLES 1/16" LARGER THAN ROD
5.2.90

WHEN THE OUTCOME HAS TO BE CERTAIN

NOTE:
NO SPLICE IS PERMITTED IN TOP PLS WITHIN 8" ADJACENT TO APPLE ROD SYSTEMS

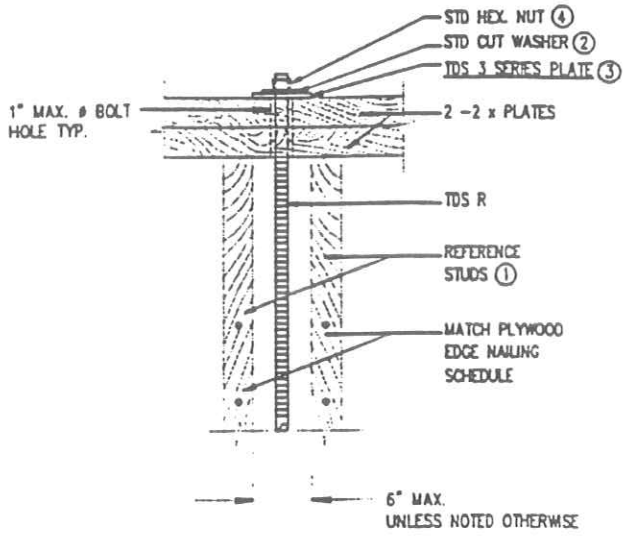

TDS 3 SERIES

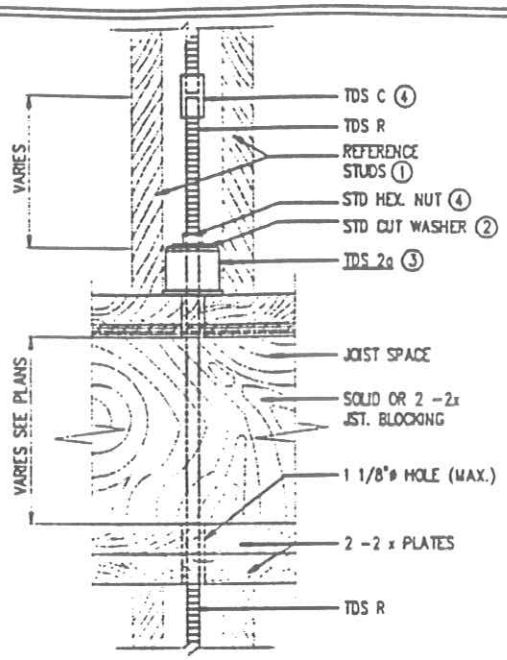

TDS 2a COMPONENT

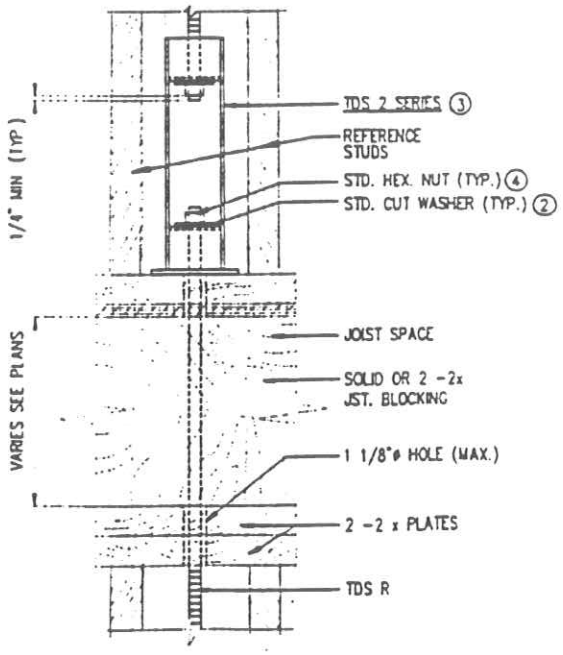

TDS 2 SERIES COMPONENTS

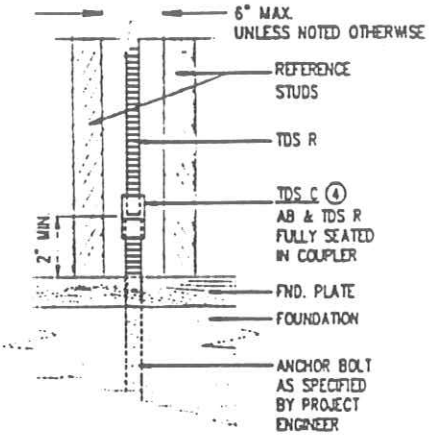

TDS C DETAIL AT FOUNDATION

NOTES:

1. STUDS AT THIS LEVEL ARE TO BE EVEN IN NUMBER AND SYMMETRICALLY PLACED.
2. WASHERS TO BE EITHER STD ANSI-A27.2 WITH HOLES 1/16" LARGER THAN ROD DIAM. OR 3/16" PLATE WITH A HOLE 1/16" LARGER THAN ROD DIAM. (WHERE HOLE IN COMPONENT IS GREATER THAN 1/16" LARGER THAN ROD ø).
3. ALL BEARING PLATES TO BE FULL BEARING ON WOOD MEMBERS.
4. ALL NUTS TO CONFORM TO A 563 GRADE A.

REGISTERED PROFESSIONAL ENGINEER
ARTHUR B. RICHARDSON
EXP. 6 30 89 93
No. 18,124
CIVIL
STATE OF CALIFORNIA

MBR SYSTEMS, INC.

BY: ABR

DATE: 11-19-88

TYPICAL COMPONENT INSTALLATION DETAILS

PAGE #: 3

MBR SYSTEMS, INC.

△1 REV 8-30-90
△2 REV 9-11-90
△3 REV 10-12-90

TDS 3 SERIES COMPONENTS

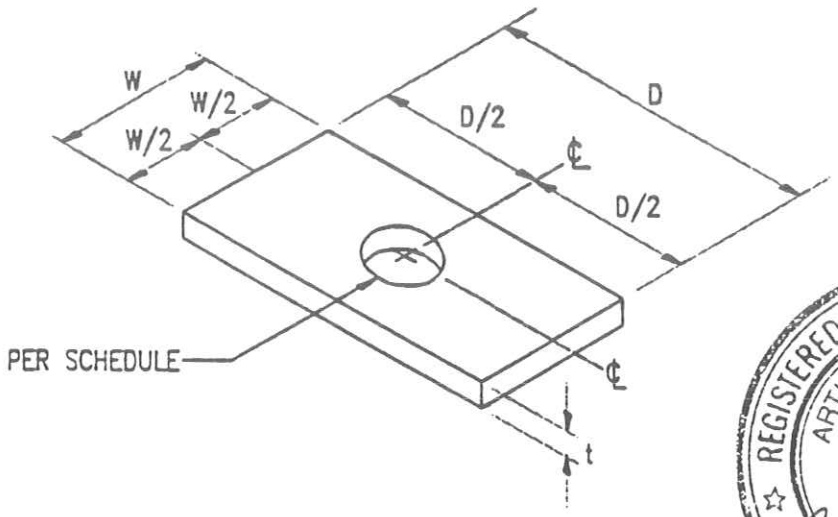

ISOMETRIC VIEW

TDS 3 SERIES DATA TABLE

DESTINATION	THICKNESS (t)	DEPTH (D)	WIDTH (W)	HOLE ø
TDS 3a	1/4"	3"	2"	9/16 ø
TDS 3b	1/4"	3"	3 1/4"	9/16 ø
TDS 3c	1/4"	3"	6"	9/16 ø
TDS 3d	3/8"	3"	6"	13/16 ø △2
TDS 3e	1/2"	3"	6"	13/16 ø
TDS 3f	1/2"	3 1/2"	6"	13/16 ø
TDS 3g	5/8"	3 1/2"	6"	15/16 ø
TDS 3h	3/4"	3 1/2"	7 1/2"	15/16 ø
TDS 3j	7/8" △1	3 1/2"	9"	17/16 ø △1
△3 " 3p	3/8"	3"	4 1/2"	11/16 ø
△3 " 3q	1/2"	3 1/2"	6 1/2"	13/16 ø
△3 " 3r	7/8"	3 1/2"	10 1/2"	15/16 ø
△3 " 3s	1"	3 1/2	12 1/2"	17/16 ø

15k
19k

Pg 4

2915 Kerner Blvd., Suite A San Rafael, CA 94901 USA TEL (415) 459-1990 FAX (415) 459-2058

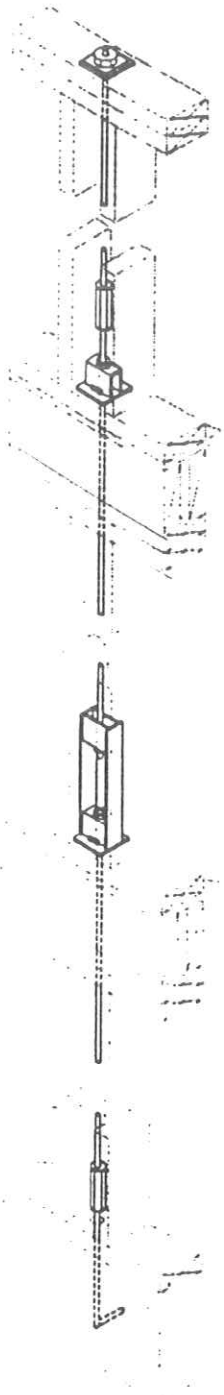

NUT INSTALLATION TORQUE

NUT SIZE (INCHES)	INSTALLATION TORQUE (IN-LBS)	
	MINIMUM	MAXIMUM
3/8"	15.0 in.lbs.	22.5 in.lbs.
1/2"	20.0 in.lbs.	30.0 in.lbs.
5/8"	25.0 in.lbs.	37.5 in.lbs.
3/4"	30.0 in.lbs.	45.0 in.lbs.
7/8"	35.0 in.lbs.	52.5 in.lbs.
1 "	40.0 in.lbs	60.0 in.lbs.

THE ABOVE MAX. AND MIN. VALUES ARE BASED ON AN INITIAL ROD TENSION OF 200# AND 300# RESPECTIVELY.

FOR BOLTS TIGHTENED WITH NUTS THE FORMULA **PL = RDT** HAS BEEN FOUND TO BE REASONABLY ACCURATE, WHERE

PL = TORQUE, INCH-POUNDS;
R = A TORQUE COEFFICIENT DEPENDING ON FRICTIONAL CONDITIONS;
D = BOLT DIAMETER, INCHES; AND
T = TENSILE LOAD, POUNDS.

FOR ORDINARY STEEL NUTS AND BOLTS, DRIVEN DRY IN STEEL, **R** APPROXIMATES 0.2.

REGISTERED PROFESSIONAL ENGINEER
ARTHUR B. RICHARDSON
EXP. 6 30 89 93
No. 18,124
CIVIL
STATE OF CALIFORNIA

MBR SYSTEMS, INC.

BY: ABR

DATE: 11-19-88

ROD TENSION INSTALLATION CRITERIA

PAGE #: 5

MBR SYSTEMS, INC.

For MBR TDSystem RODS (ASTM A 108/UNS 1045 with rolled threads)

Ft=.33 Fu; Ft=1/3 x 120,000 psi x 1.33 = 53,333 psi

RODS	AREA SQ. IN.	VALUE @ 53333 PSI	ASSIGNED VALUE
R3 = 3/8" DIA.	.1104	5888 #	5880 #
R4 = 1/2" DIA.	.1963	10469 #	10460 #
R5 = 5/8" DIA.	.3068	16363 #	16360 #
R6 = 3/4" DIA.	.4418	23563 #	23560 #
R7 = 7/8" DIA.	.6013	32069 #	32060 #
R8 - 1" DIA.	.7854	41888	41800 #

REGISTERED PROFESSIONAL ENGINEER
ARTHUR B. RICHARDSON
EXP 6-30-93
No. 18,124
CIVIL
STATE OF CALIFORNIA

ARTHUR B. RICHARDSON
STATE OF WASHINGTON
REGISTERED
PROFESSIONAL ENGINEER

P95A

2915 Kerner Blvd., Suite A San Rafael, CA 94901 USA TEL (415) 459-1990 FAX (415) 459-2058

WHEN THE OUTCOME HAS TO BE CERTAIN

OMIT BLOCKING ABOVE PLATE UNTIL TDSystem IS INSTALLED.

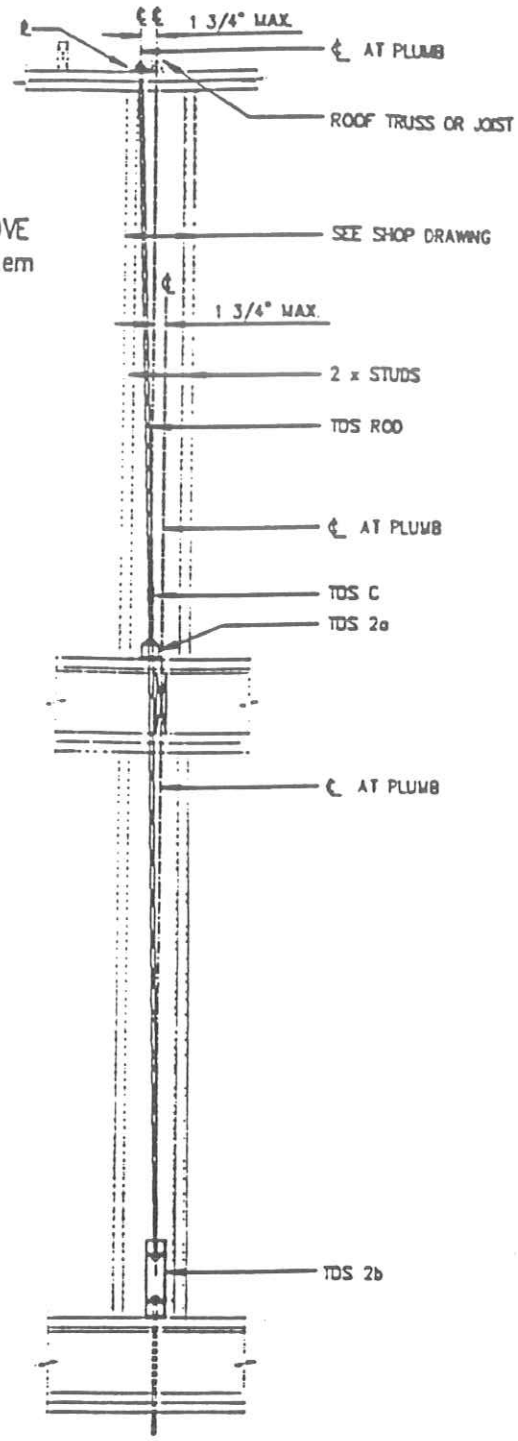

REGISTERED PROFESSIONAL ENGINEER
ARTHUR B. RICHARDSON
EXP. 6 30 93
No. 18,124
CIVIL
STATE OF CALIFORNIA

MBR SYSTEMS, INC.

BY: ABR

DATE: 5-11-88

ALLOWABLE OFFSET
INSTALLATION CRITERIA

PAGE #: [redacted] 6

RELY ON THE BEST

MBR SYSTEMS, INC.

TDS 10 SERIES (ONE STORY)

TDS	TDS MOD #	TDS VALUES	TDS ROD VALUES	CONTROLLING VALUES
TDS 11	3a	3730		
C 3a F (3)	R3		2830	2830
TDS 12	3b	4440		
C 3b F (4)	R4		5060	4440
TDS 13	3c	4970		
C 3c F (4)	R4		5060	4970
TDS 14	3d	8890 *		
C 3d F (5)	R5		7900	A.B. 6080
TDS 15	3d	8890 *		
C 3d F (5)	R5		7900	7900
TDS 16	3e	9320 *		
C 3e F (6)	R6		11380	9320
TDS 17	3f	10350 *		
C 3f F (7)	R7		15500	10350
TDS 18	3g	12690 *		
C 3g F (7)	R7		15500	12690
TDS 19	3h	15000 *		
C 3h F (7)	R7		15500	15000

TDS 20 SERIES (TWO STORY)

TDS	TDS MOD #	TDS VALUES	TDS ROD VALUES	CONTROLLING VALUES
TDS 21	3a	3730		
	R3		2830	2830
	2a	6310		A.B. 4435
C 3a 2a F (34)	R4		5060	
TDS 22	3b	4440		
	R4		5060	4440
	2a	6310		A.B. 4810
C 3b 2a F (44)	R4		5060	
TDS 23	3b	4440		
	R4		5060	4440
	2a	6310		
C 3b 2a F (45)	R5		7900	A.B. 6080
TDS 24	3c	4970		
	R4		5060	4970
	2a	6310		
C 3c 2a F (45)	R5		7900	7900
TDS 25	3d	8890 *		
	R5		7900	7900
	2a	6310		
C 3d 2a F (56)	R6		11380	11380
TDS 26	3e	9320 *		
	R6		11380	9320
	2a	6310		
C 3e 2a F (66)	R6		11380	11380
TDS 27	3f	10350 *		
	R6		11380	10350
	2a	6310		A.B. 13665
C 3f 2a F (67)	R7		15500	
TDS 28	3g	12690 *		
	R7		15500	12690
	2a	6310		
C 3g 2a F (77)	R7		15500	15500
TDS 29	3h	15000 *		
	R7		15500	15000
	2d	6310		A.B. 17500
C 3h 2a F (78)	R8		20240	

TDS 40 SERIES (FOUR STORY)

TDS	TDS MOD #	TDS VALUES	TDS ROD VALUES	CONTROLLING VALUES
TDS 41	3a	3730		
	R3		2830	2830
	2a	6310		
	R4		5060	5060
	2b	6310		
	R4		5060	5060
	2b	6310		
C 3a 2a 2b 2b F (3444)	R4		5060	5060
TDS 42	3a	3730		
	R3		2830	2830
	2a	6310		
	R4		5060	5060
	2b	6310		
	R4		5060	5060
	2b	6310		
C 3a 2a 2b 2b F (3445)	R5		7900	A.B. 6080
TDS 43	3a	3730		
	R3		2830	2830
	2a	6310		
	R4		5060	5060
	2b	6310		
	R4		5060	5060
	2b	6310		
C 3a 2a 2b 2b F (3446)	R6		11380	A.B. 9530
TDS 44	3b	4440		
	R4		5060	4440
	2a	6310		
	R4		5060	5060
	2b	6310		
	R5		7900	7900
	2b	6310		A.B. 11090
C 3b 2a 2b 2b F (4456)	R6		11380	
TDS 45	3c	4970		
	R4		5060	4970
	2a	6310		STUDS 7150
	R5		7900	
	2b	6310		A.B. 11090
	R6		11380	
	2b	6310		A.B. 11090
C 3c 2a 2b 2b F (4566)	R6		11380	
TDS 46	3c	4970		
	R4		5060	4970
	2a	6310		STUDS 7150
	R5		7900	
	2b	6310		
	R6		11380	11380
	2b	6310		A.B. 13665
C 3c 2a 2b 2b F (4567)	R7		15500	
TDS 47	3d	8890 *		
	R5		7900	STUDS 7150
	2a	6310		STUDS 10720
	R6		11380	
	2b	6310		
	R6		11380	11380
	2b	6310		A.B. 13665
C 3d 2a 2b 2b F (5567)	R7		15500	
TDS 48	3d	8890 *		
	R5		7900	STUDS 7150
	2a	6310		STUDS 10720
	R6		11380	
	2b	6310		
	R6		11380	11380
	2b	6310		2b 16800
C 3d 2a 2b 2b F (5668)	R8		20240	
TDS 49	3d	8890 *		
	R6		11380	8890
	2a	6310		STUDS 10720
	R6		11380	
	2b	6310		
	R7		15500	15500
	2b	6310		2b 16800
C 3d 2a 2b 2b F (6678)	R8		20240	

TDS 30 SERIES (THREE STORY)

TDS	TDS MOD #	TDS VALUES	TDS ROD VALUES	CONTROLLING VALUES
TDS 31	3a	3730		
	R3		2830	2830
	2a	6310		
	R4		5060	5060
	2b	6310		
C 3a 2a 2b F (344)	R4		5060	5060
TDS 32	3b	4440		
	R4		5060	4440
	2a	6310		
	R4		5060	5060
	2b	6310		A.B. 6080
C 3b 2a 2b F (445)	R5		7900	
TDS 33	3b	4440		
	R4		5060	4440
	2a	6310		5060
	R4		5060	
	2b	6310		
C 3b 2a 2b F (446)	R6		11380	A.B. 9530
TDS 34	3b	4440		
	R4		5060	4440
	2a	6310		
	R5		7900	7900
	2b	6310		
C 3b 2a 2b F (456)	R6		11380	A.B. 11090
TDS 35	3d	8890 *		
	R5		7900	STUDS 7150
	2a	6310		
	R6		11380	11380
	2b	6310		
C 3d 2a 2b F (566)	R6		11380	11380
TDS 36	3d	8890 *		
	R5		7900	STUDS 7150
	2a	6310		
	R6		11380	11380
	2b	6310		
C 3d 2a 2b F (567)	R7		15500	A.B. 13665
TDS 37	3e	9320 *		
	R6		11380	9320
	2a	6310		
	R6		11380	11380
	2b	6310		
C 3e 2a 2b F (667)	R7		15500	A.B. 13665
TDS 38	3f	10350 *		
	R6		11380	10350
	2a	6310		
	R7		15500	15500
	2b	6310		2b 16800
C 3f 2a 2b F (678)	R8		20240	

REGISTERED PROFESSIONAL ENGINEER
ARTHUR B. RICHARDSON
EXP. 6 30 82 93
No. 18,124
CIVIL
STATE OF CALIFORNIA

MBR SYSTEMS, INC.

NOTE : * 3.5" CLEAR BETWEEN STUDS

BY: ABR

DATE: 6-8-88

CONTROLLING VALUE FOR LOAD CAPACITY
STANDARD AP&E TIE DOWN SYSTEM
ASSEMBLIES

MBR SYSTEMS, INC.

HUMBOLDT STATE

90063 2-28-91

REGISTERED PROFESSIONAL ENGINEER
ARTHUR B. RICHARDSON
EXP 6-30-93
No. 18,124
CIVIL
STATE OF CALIFORNIA

ASSEMBLY CALCULATION

CUSTOM 40

	TDS MODEL	TDS VAL	TDS ROD	Σ TDS ⊥ VAL	FRAM VAL	CONTROL VAL		HD VAL	HD
	3b (3½)	6.03							
3RD	R3		5.88			5.88		3.32	HD2
	2-2x6				12.89				
	2a	6.30		12.18		12.18			
2ND	R5		16.36					4.77	HD5
	2-2x6				12.89				
	2b	6.30		18.48		18.48			
1ST	R6		25.36					9.26	HD7
	2-3x6				19.76				
	2Bx	6.30		24.78		24.78		9.26	HD7
UNDER PINNING	R7		32.0					15.55	HD12
	2-4x6				26.44			24.81	

PG 7A

Note: 1. See stud wall schedule on structural sheets and holdown post schedule on S1.2 for wall thickness.
2. All rods are 120 ksi-1045 steel with double plate washers typical.
3. Studs shown at lowest level are underpinning typical.

2915 Kerner Blvd., Suite A San Rafael, CA 94901 USA TEL (415) 459-1990 FAX (415) 459-2058

MBR SYSTEMS, INC.

HUMBOLDT STATE

90063 2-28-91

4440 # (3) (5) / 4810 # (3) (4)	4970 # (3) (5) / 7900 # (3) (4)	7900 # (3) (5) / 11380 # (3) (4)	9320 # (3) (5) / 11380 # (3) (4)	10350 # (3) (5) / 13665 # (3) (4)
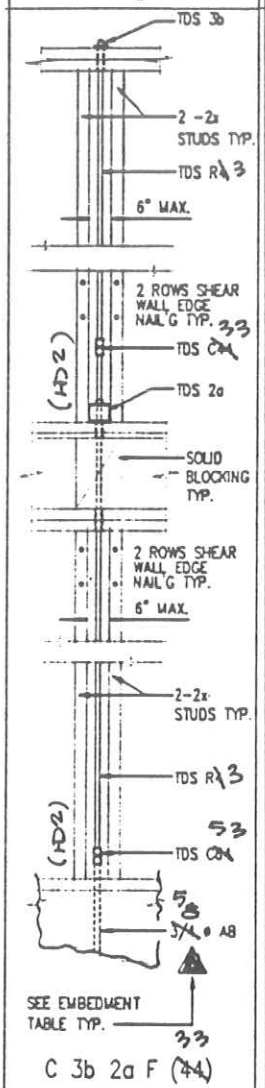	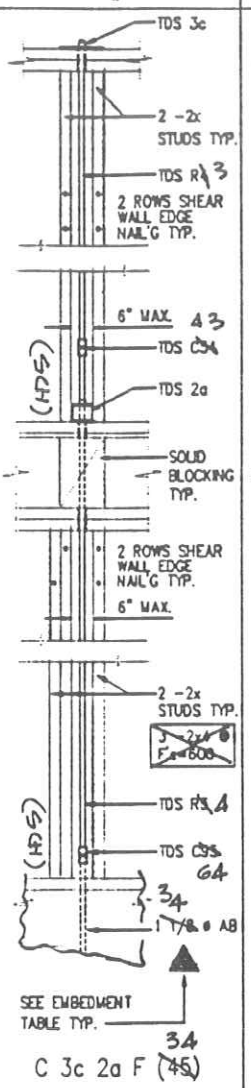	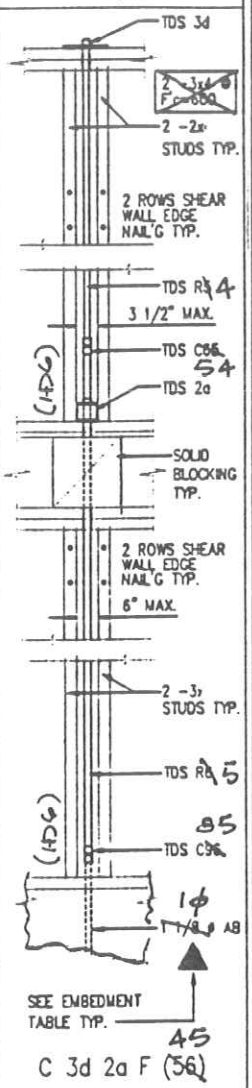	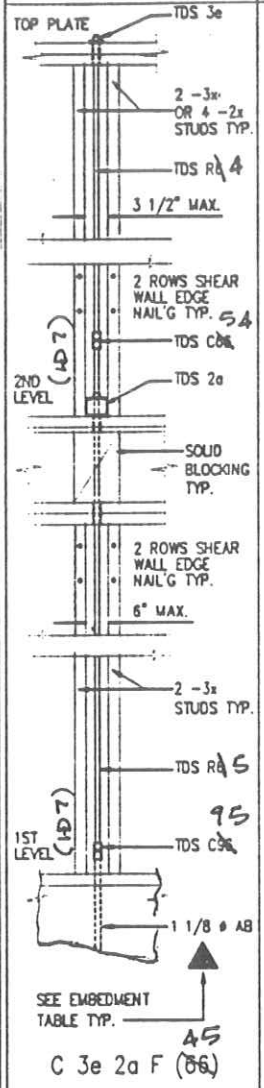	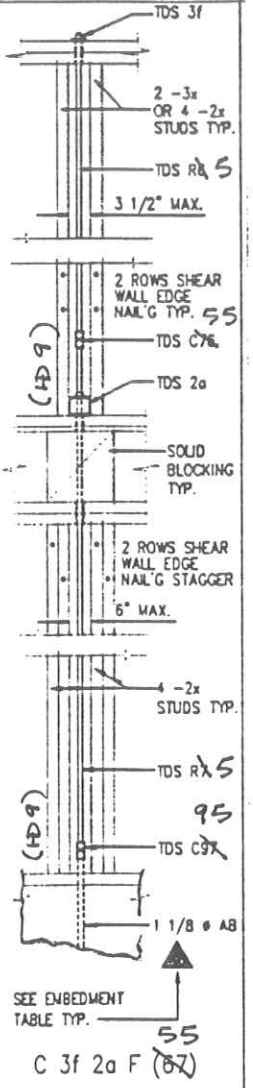
C 3b 2a F (44)	C 3c 2a F (45)	C 3d 2a F (56)	C 3e 2a F (56)	C 3f 2a F (67)
22 TDS 22	24 TDS 24	25 TDS 25	26 TDS 26	27 TDS 27

Pg 8

Note: 1. See stud wall schedule on structural sheets and holdown post schedule on S1.2 for wall thickness.
2. All rods are 120 ksi-1045 steel with double plate washers typical.
3. Studs shown at lowest level are underpinning typical.

2915 Kerner Blvd., Suite A San Rafael, CA 94901 USA TEL (415) 459-1990 FAX (415) 459-2058

MBR SYSTEMS, INC.

HUMBOLDT STATE

90063 2-28-91

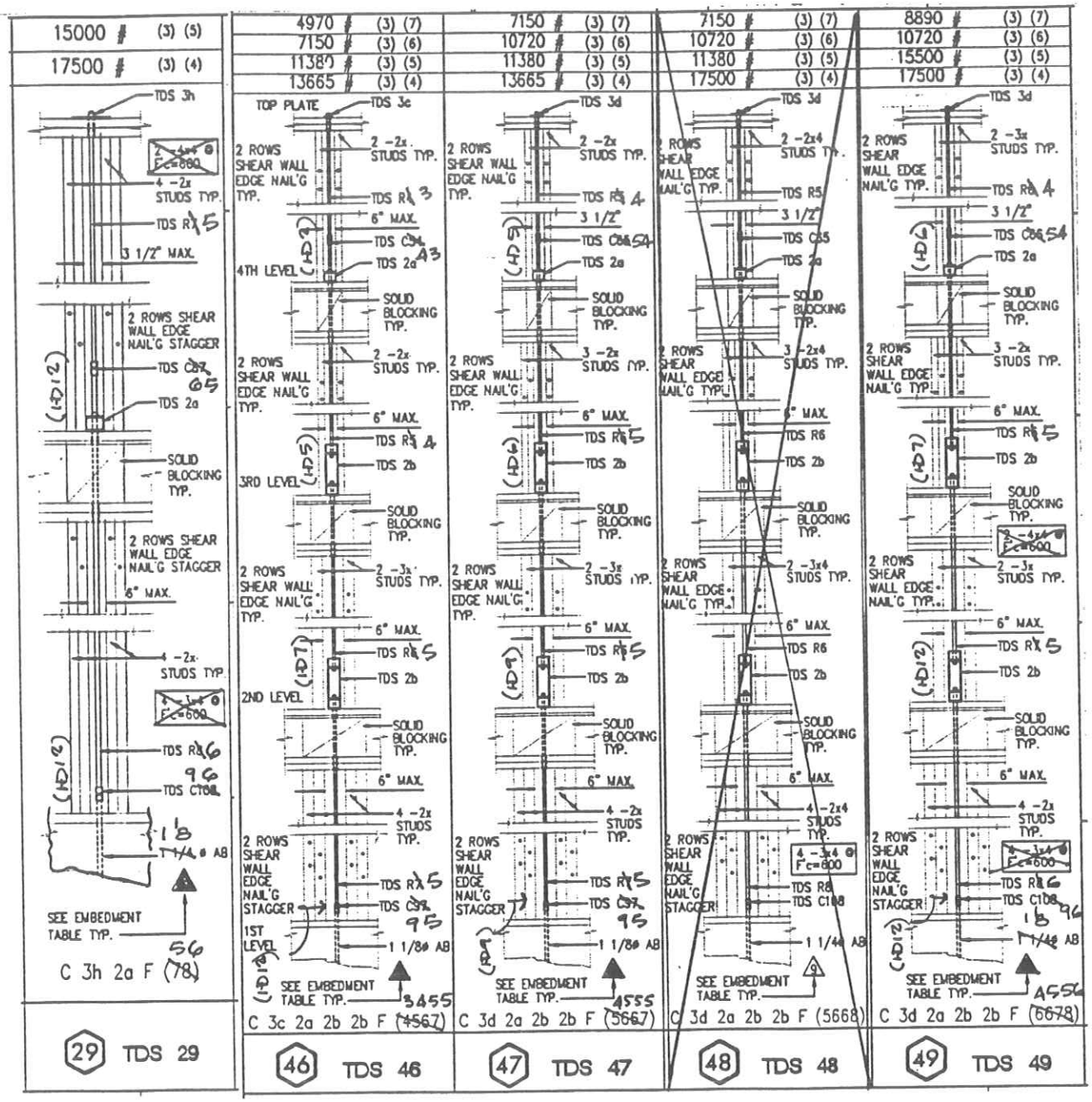

Pg 9

Note: 1. See stud wall schedule on structural sheets and holdown post schedule on S1.2 for wall thickness.
2. All rods are 120 ksi-1045 steel with double plate washers typical.
3. Studs shown at lowest level are underpinning typical.

2915 Kerner Blvd., Suite A San Rafael, CA 94901 USA TEL (415) 459-1990 FAX (415) 459-2058

MBR SYSTEMS, INC.

HUMBOLDT STATE

90063 2-28-91

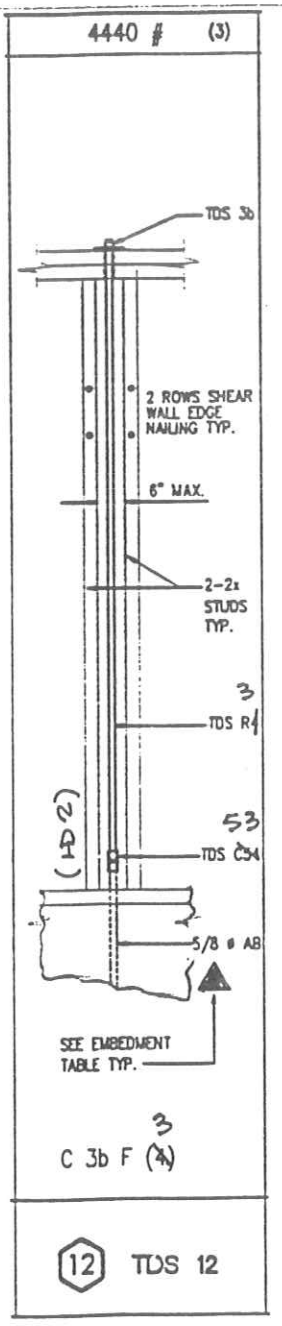

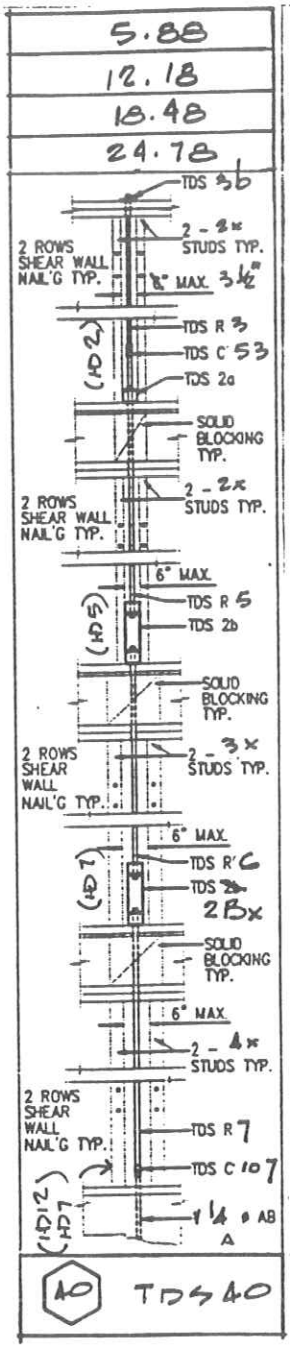

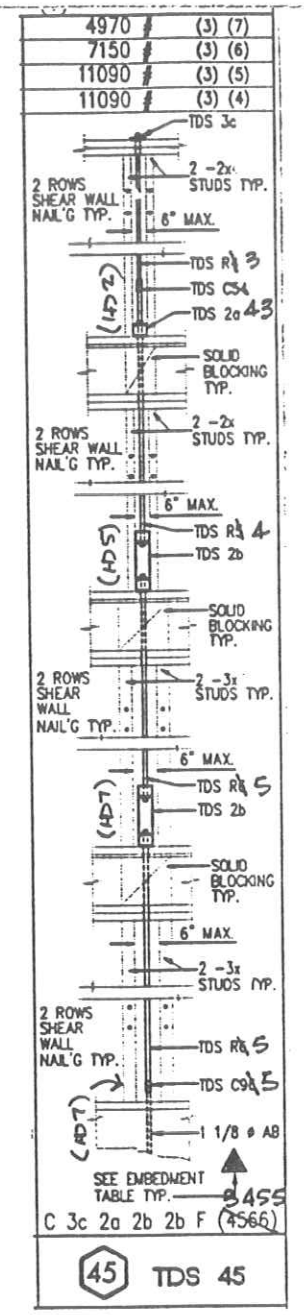

PG 10

Note: 1. See stud wall schedule on structural sheets and holdown post schedule on S1.2 for wall thickness.
2. All rods are 120 ksi-1045 steel with double plate washers typical.
3. Studs shown at lowest level are underpinning typical.

2915 Kerner Blvd., Suite A San Rafael, CA 94901 USA TEL (415) 459-1990 FAX (415) 459-2058