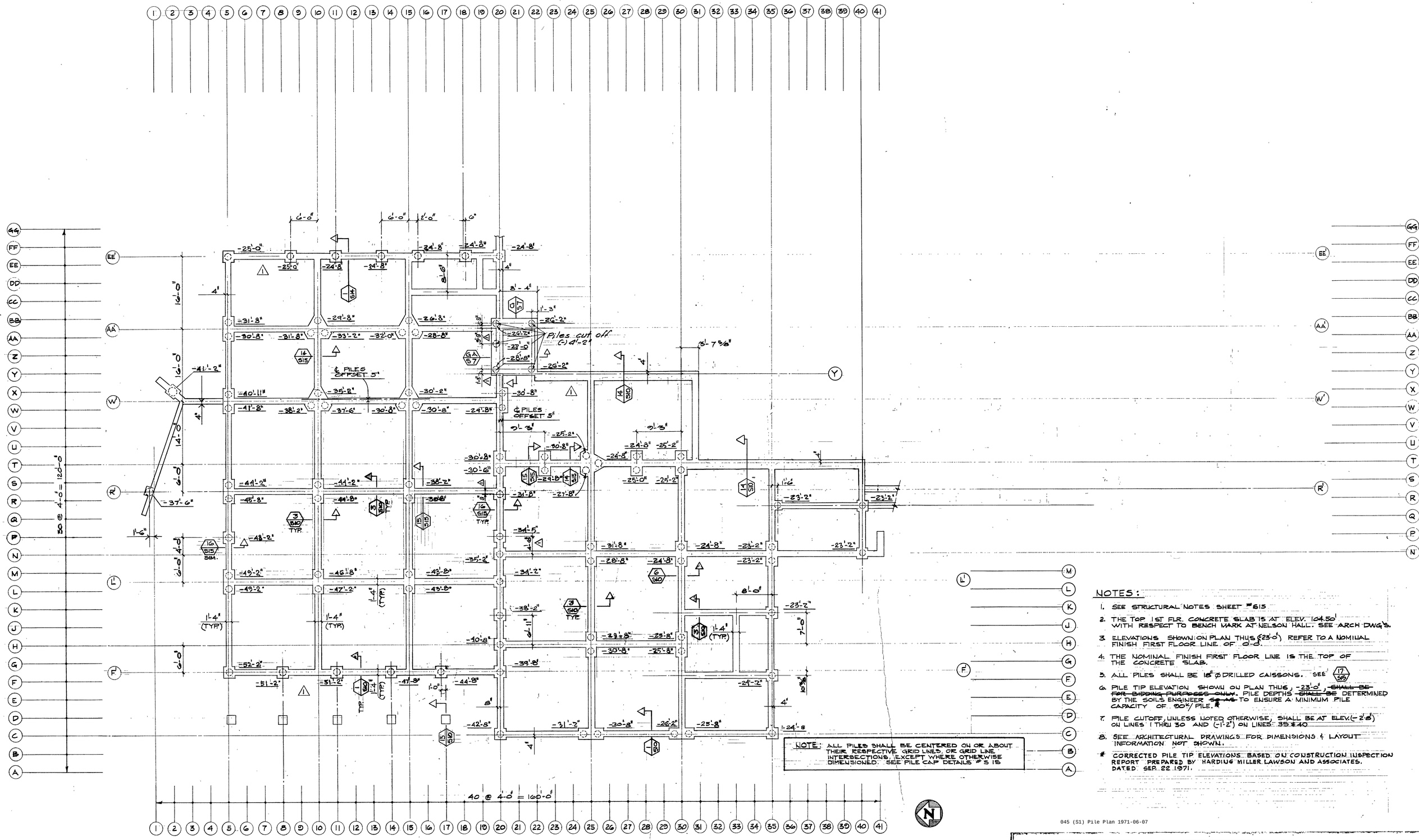

NOTE: ALL PILES SHALL BE CENTERED ON OR ABOUT THEIR RESPECTIVE GRID LINES, OR GRID LINE INTERSECTIONS, EXCEPT WHERE OTHERWISE DIMENSIONED. SEE PILE CAP DETAILS #S 15

PILE PLAN
SCALE: 1/8" = 1'-0"

NOTES:

1. SEE STRUCTURAL NOTES SHEET #S15
2. THE TOP 1ST FLR. CONCRETE SLAB IS AT ELEV. 104.50' WITH RESPECT TO BENCH MARK AT NELSON HALL. SEE ARCH DWG'S.
3. ELEVATIONS SHOWN ON PLAN THUS (-23'-0') REFER TO A NOMINAL FINISH FIRST FLOOR LINE OF 0'-0".
4. THE NOMINAL FINISH FIRST FLOOR LINE IS THE TOP OF THE CONCRETE SLAB.
5. ALL PILES SHALL BE 18" ⌀ DRILLED CAISSONS. SEE 17/S15
6. PILE TIP ELEVATION SHOWN ON PLAN THUS, -23'-0", ~~SHALL BE FOR BIDDING PURPOSES ONLY.~~ PILE DEPTHS ~~SHALL BE~~ DETERMINED BY THE SOILS ENGINEER ~~SO AS~~ TO ENSURE A MINIMUM PILE CAPACITY OF 90k/PILE.*
7. PILE CUTOFF, UNLESS NOTED OTHERWISE, SHALL BE AT ELEV. (-2'-8") ON LINES 1 THRU 30 AND (-1'-2") ON LINES 35 & 40
8. SEE ARCHITECTURAL DRAWINGS FOR DIMENSIONS & LAYOUT INFORMATION NOT SHOWN.

* CORRECTED PILE TIP ELEVATIONS BASED ON CONSTRUCTION INSPECTION REPORT PREPARED BY HARDING MILLER LAWSON AND ASSOCIATES. DATED SEP. 22 1971.

045 (S1) Pile Plan 1971-06-07

GFDS ENGINEERS
CIVIL & STRUCTURAL ENGINEERS
1620 MONTGOMERY ST., SAN FRANCISCO, CALIFORNIA
Edward Hoffman SE1327

PILE PLAN

DATE: 16 MAR '70
△1 7 JUNE '71

As built

COLLEGE UNION
HUMBOLDT STATE COLLEGE, ARCATA, CALIFORNIA

TRUMP AND SAUBLE, MARVIN TRUMP, ARCHITECT, A.I.A.
202 M STREET EUREKA, CALIFORNIA 95501 TEL. 707-442-1554

S1

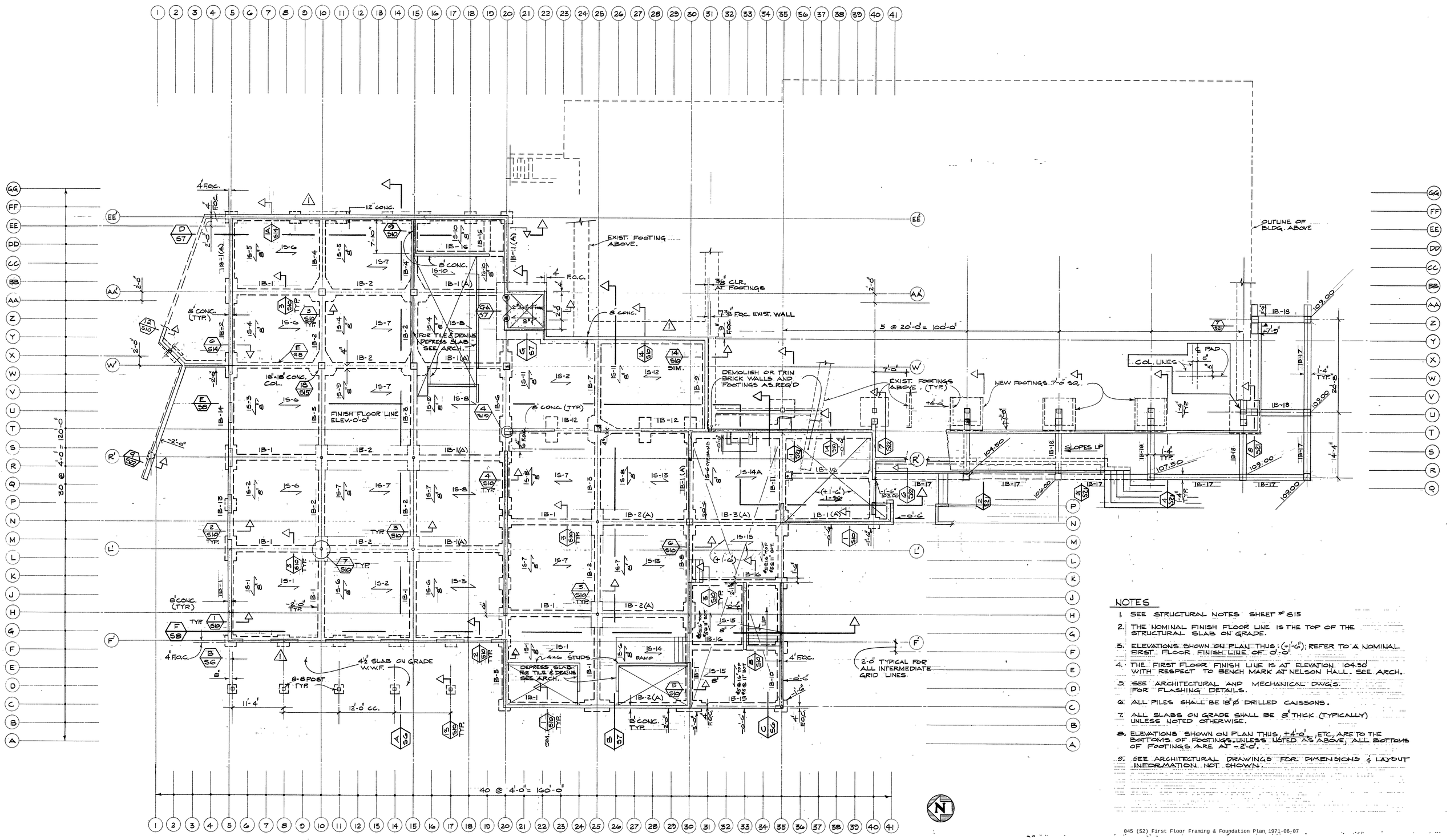

NOTES

1. SEE STRUCTURAL NOTES SHEET # S15
2. THE NOMINAL FINISH FLOOR LINE IS THE TOP OF THE STRUCTURAL SLAB ON GRADE.
3. ELEVATIONS SHOWN ON PLAN THUS: (+1'-6"); REFER TO A NOMINAL FIRST FLOOR FINISH LINE OF 0'-0".
4. THE FIRST FLOOR FINISH LINE IS AT ELEVATION 104.50 WITH RESPECT TO BENCH MARK AT NELSON HALL. SEE ARCH.
5. SEE ARCHITECTURAL AND MECHANICAL DWGS. FOR FLASHING DETAILS.
6. ALL PILES SHALL BE 18"ø DRILLED CAISSONS.
7. ALL SLABS ON GRADE SHALL BE 8" THICK (TYPICALLY) UNLESS NOTED OTHERWISE.
8. ELEVATIONS SHOWN ON PLAN THUS +4'-0", ETC, ARE TO THE BOTTOMS OF FOOTINGS UNLESS NOTED AS ABOVE, ALL BOTTOMS OF FOOTINGS ARE AT -2'-0".
9. SEE ARCHITECTURAL DRAWINGS FOR DIMENSIONS & LAYOUT INFORMATION NOT SHOWN.

045 (S2) First Floor Framing & Foundation Plan 1971-06-07

FOUNDATION AND FIRST FLOOR FRAMING PLAN
SCALE : 1/8" = 1'-0"

GFDS ENGINEERS
CIVIL & STRUCTURAL ENGINEERS
1620 MONTGOMERY ST., SAN FRANCISCO, CALIFORNIA
SE 1327

FIRST FLOOR FRAMING AND FOUNDATION PLAN

DATE: 16 MAR '70
7 JUNE '71
As built

COLLEGE UNION
HUMBOLDT STATE COLLEGE, ARCATA, CALIFORNIA

TRUMP AND SAUBLE, MARVIN TRUMP, ARCHITECT, A.I.A.
202 M STREET EUREKA, CALIFORNIA 95501 TEL. 707 - 442-1554

S2

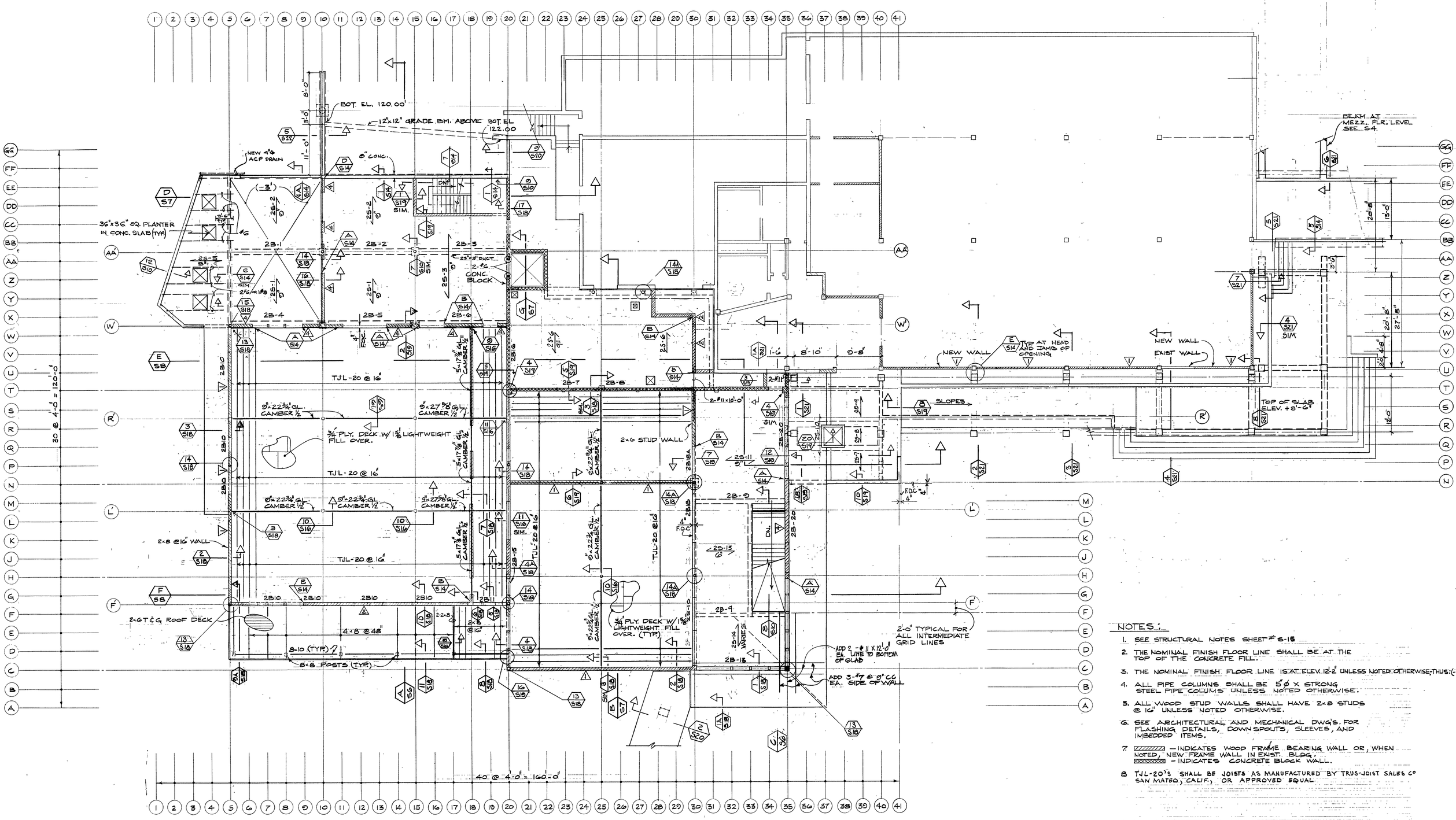

SECOND FLOOR FRAMING PLAN

SCALE: 1/8" = 1'-0"

NOTES:

1. SEE STRUCTURAL NOTES SHEET # S-15
2. THE NOMINAL FINISH FLOOR LINE SHALL BE AT THE TOP OF THE CONCRETE FILL.
3. THE NOMINAL FINISH FLOOR LINE IS AT ELEV. 12-2 UNLESS NOTED OTHERWISE; THUS: (-3")
4. ALL PIPE COLUMNS SHALL BE 5ø X STRONG STEEL PIPE COLUMS UNLESS NOTED OTHERWISE.
5. ALL WOOD STUD WALLS SHALL HAVE 2x8 STUDS @ 16" UNLESS NOTED OTHERWISE.
6. SEE ARCHITECTURAL AND MECHANICAL DWG'S. FOR FLASHING DETAILS, DOWN SPOUTS, SLEEVES, AND IMBEDDED ITEMS.
7. ▨ — INDICATES WOOD FRAME BEARING WALL OR, WHEN NOTED, NEW FRAME WALL IN EXIST. BLDG. ▩ — INDICATES CONCRETE BLOCK WALL.
8. TJL-20'S SHALL BE JOISTS AS MANUFACTURED BY TRUS-JOIST SALES CO SAN MATEO, CALIF.) OR APPROVED EQUAL.

045 (S3) Second Floor Framing Plan 1970-03-16

GFDS ENGINEERS
CIVIL & STRUCTURAL ENGINEERS
1620 MONTGOMERY ST., SAN FRANCISCO, CALIFORNIA
Edward L. Stillman SE1327

SECOND FLOOR FRAMING PLAN

DATE: 16 MAR '70
As built

COLLEGE UNION
HUMBOLDT STATE COLLEGE, ARCATA, CALIFORNIA

TRUMP AND SAUBLE, MARVIN TRUMP, ARCHITECT, A.I.A.
202 M STREET EUREKA, CALIFORNIA 95501 TEL. 707 - 442-1554

S3

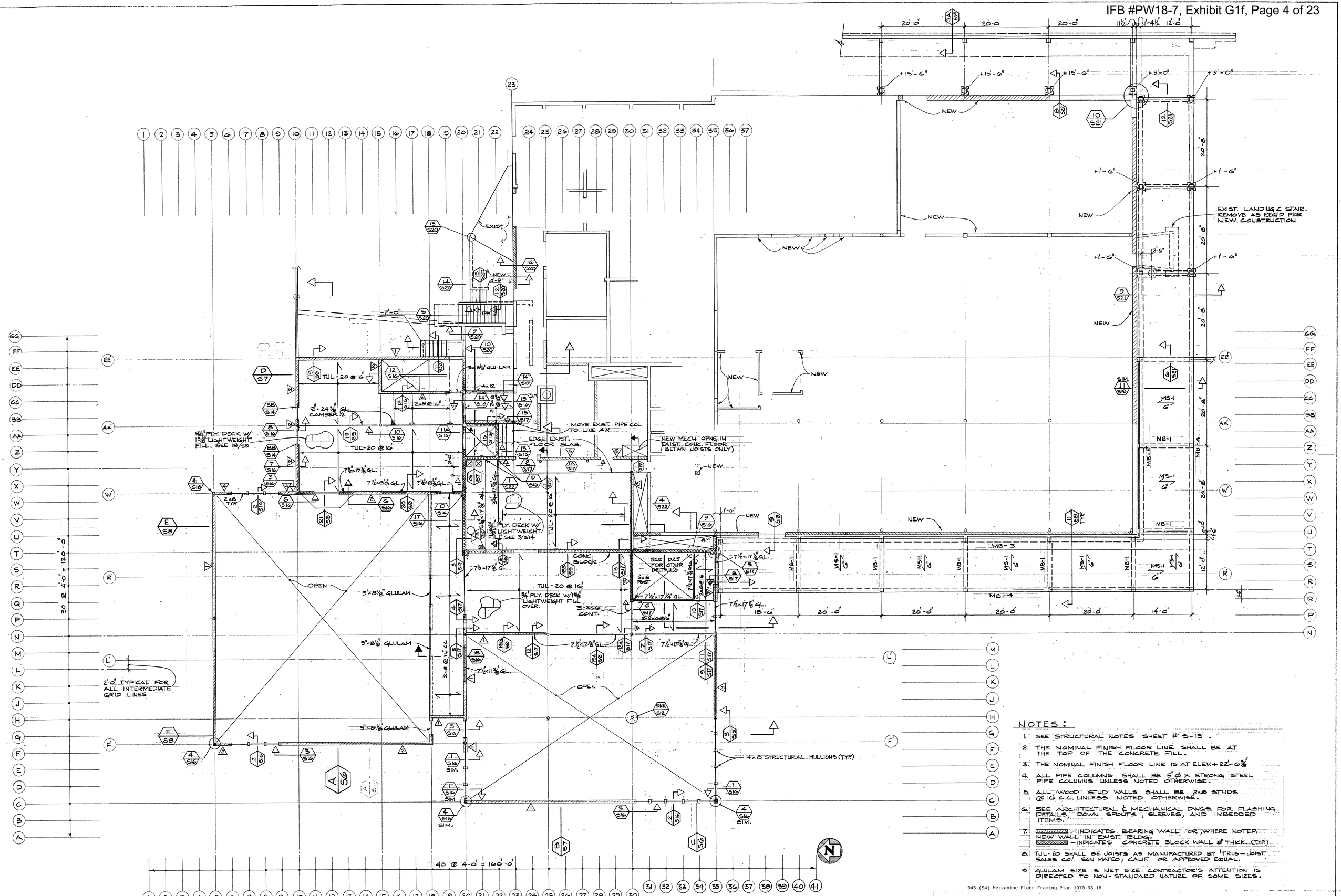

NOTES:

1. SEE STRUCTURAL NOTES SHEET # S-15 .
2. THE NOMINAL FINISH FLOOR LINE SHALL BE AT THE TOP OF THE CONCRETE FILL.
3. THE NOMINAL FINISH FLOOR LINE IS AT ELEV.+ 22'-6⅜"
4. ALL PIPE COLUMNS SHALL BE 5"Ø X STRONG STEEL PIPE COLUMNS UNLESS NOTED OTHERWISE.
5. ALL WOOD STUD WALLS SHALL BE 2x8 STUDS @ 16" C.C. UNLESS NOTED OTHERWISE.
6. SEE ARCHITECTURAL & MECHANICAL DWGS FOR FLASHING, DETAILS, DOWN SPOUTS, SLEEVES, AND IMBEDDED ITEMS.
7. ▨ – INDICATES BEARING WALL OR, WHERE NOTED, NEW WALL IN EXIST. BLDG. ▩ – INDICATES CONCRETE BLOCK WALL 8" THICK. (TYP.)
8. TJL-20 SHALL BE JOISTS AS MANUFACTURED BY 'TRUS-JOIST SALES CO." SAN MATEO, CALIF. OR APPROVED EQUAL.
9. GLULAM SIZE IS NET SIZE. CONTRACTOR'S ATTENTION IS DIRECTED TO NON-STANDARD NATURE OF SOME SIZES.

MEZZANINE FLOOR FRAMING PLAN

SCALE: ⅛" = 1'-0"

045 (S4) Mezzanine Floor Framing Plan 1970-03-16

GFDS ENGINEERS
CIVIL & STRUCTURAL ENGINEERS
1610 MONTGOMERY ST., SAN FRANCISCO, CALIFORNIA
SE1527

MEZZANINE FLOOR FRAMING PLAN

DATE: 16 MAR '70
As built

COLLEGE UNION
HUMBOLDT STATE COLLEGE, ARCATA, CALIFORNIA

TRUMP AND SAUBLE, MARVIN TRUMP, ARCHITECT, A.I.A.
202 M STREET EUREKA, CALIFORNIA 95501 TEL. 707-442-1554

S4

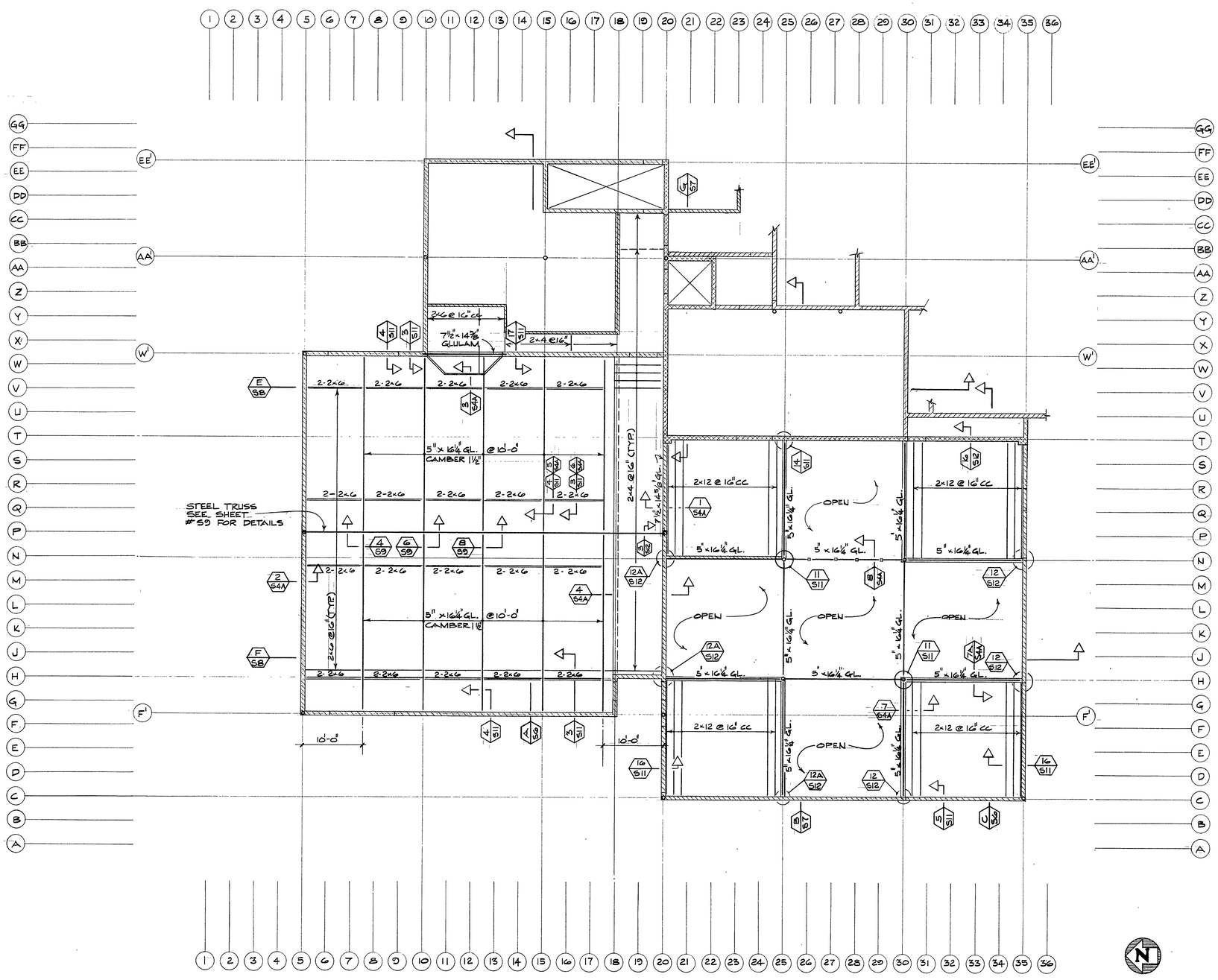

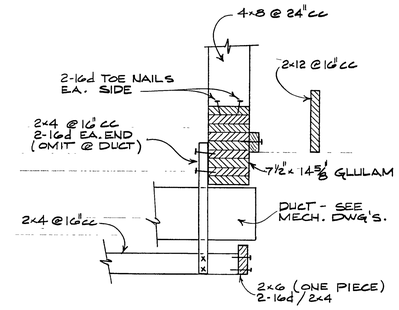

1 S4A

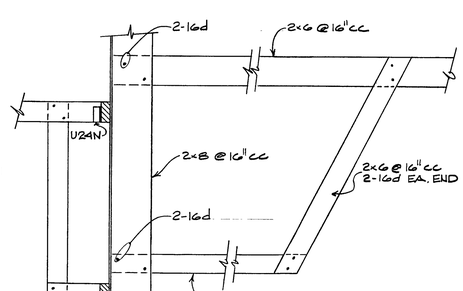

2 S4A

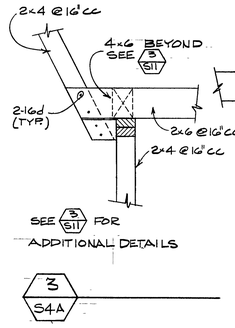

3 S4A

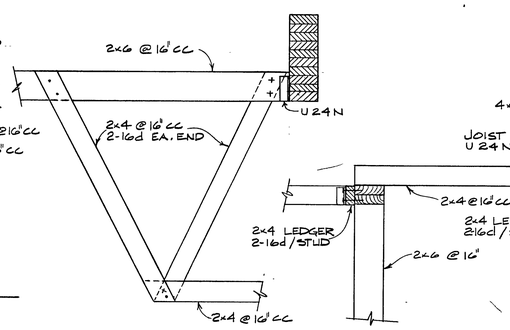

4 S4A

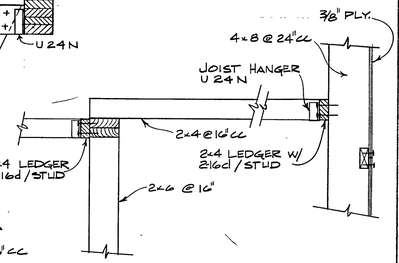

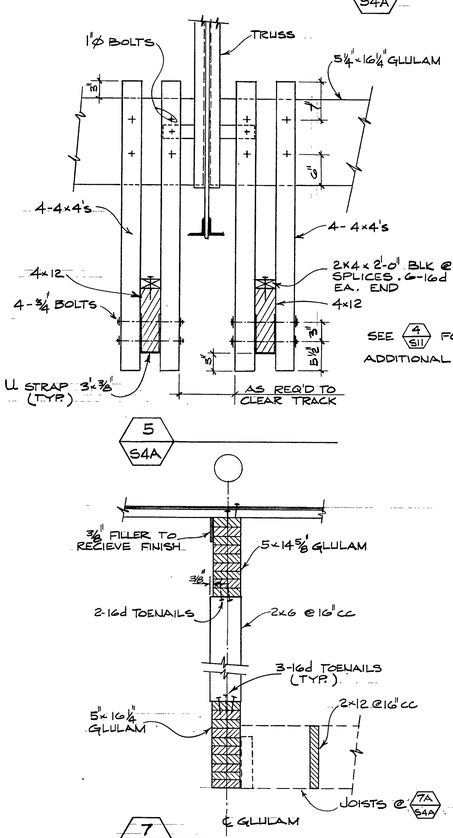

5 S4A

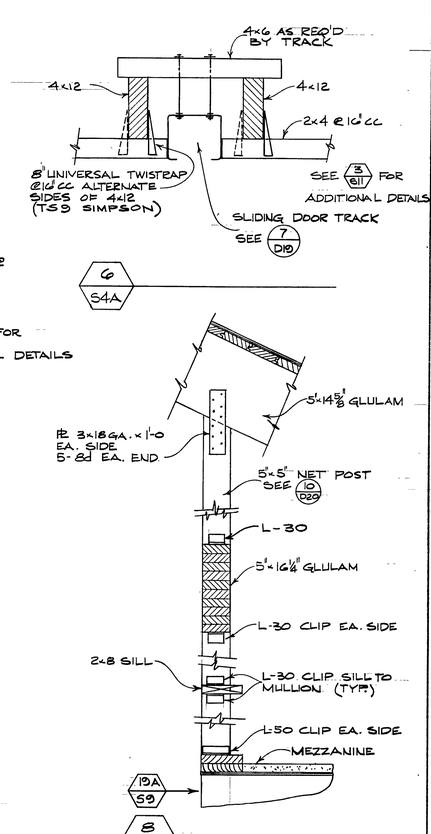

6 S4A

7 S4A

8 S4A

045 (S4A) Ceiling Framing Plan & Details 1970-03-16

CEILING FRAMING PLAN
SCALE : ⅛" = 1'-0"

GFDS ENGINEERS
CIVIL & STRUCTURAL ENGINEERS
1620 MONTGOMERY ST., SAN FRANCISCO, CALIFORNIA
SE1327

CEILING FRAMING PLAN AND DETAILS

DATE: 16 MAR'70
As built

COLLEGE UNION
HUMBOLDT STATE COLLEGE, ARCATA, CALIFORNIA

TRUMP AND SAUBLE, MARVIN TRUMP, ARCHITECT, A.I.A.
202 M STREET EUREKA, CALIFORNIA 95501 TEL. 707 - 442-1554

S4A

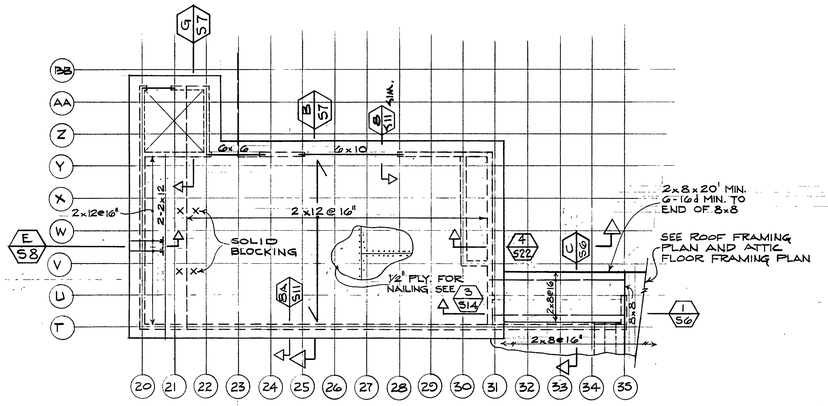

ATTIC ROOF FRAMING PLAN
SCALE: ⅛" = 1'-0"

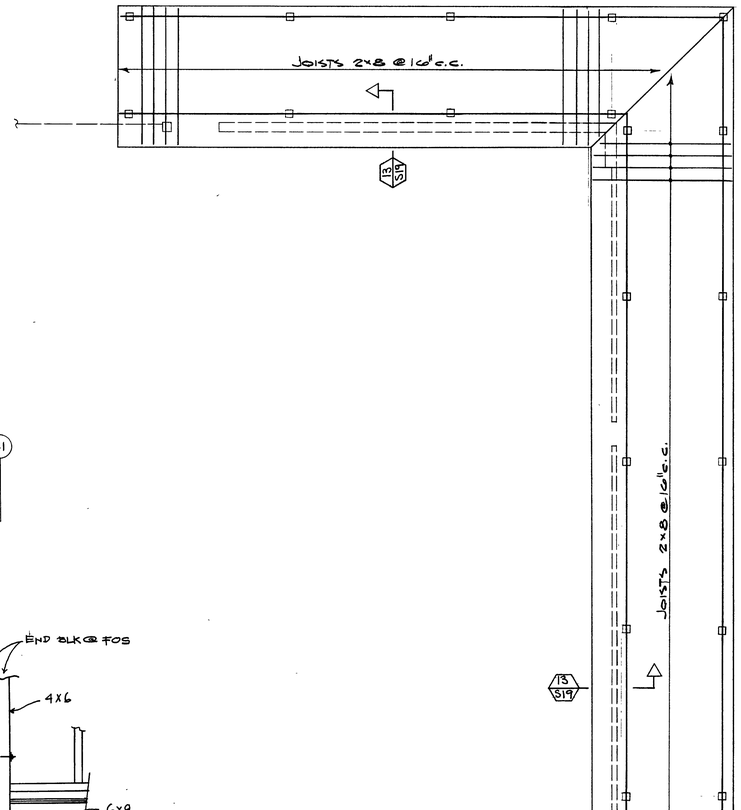

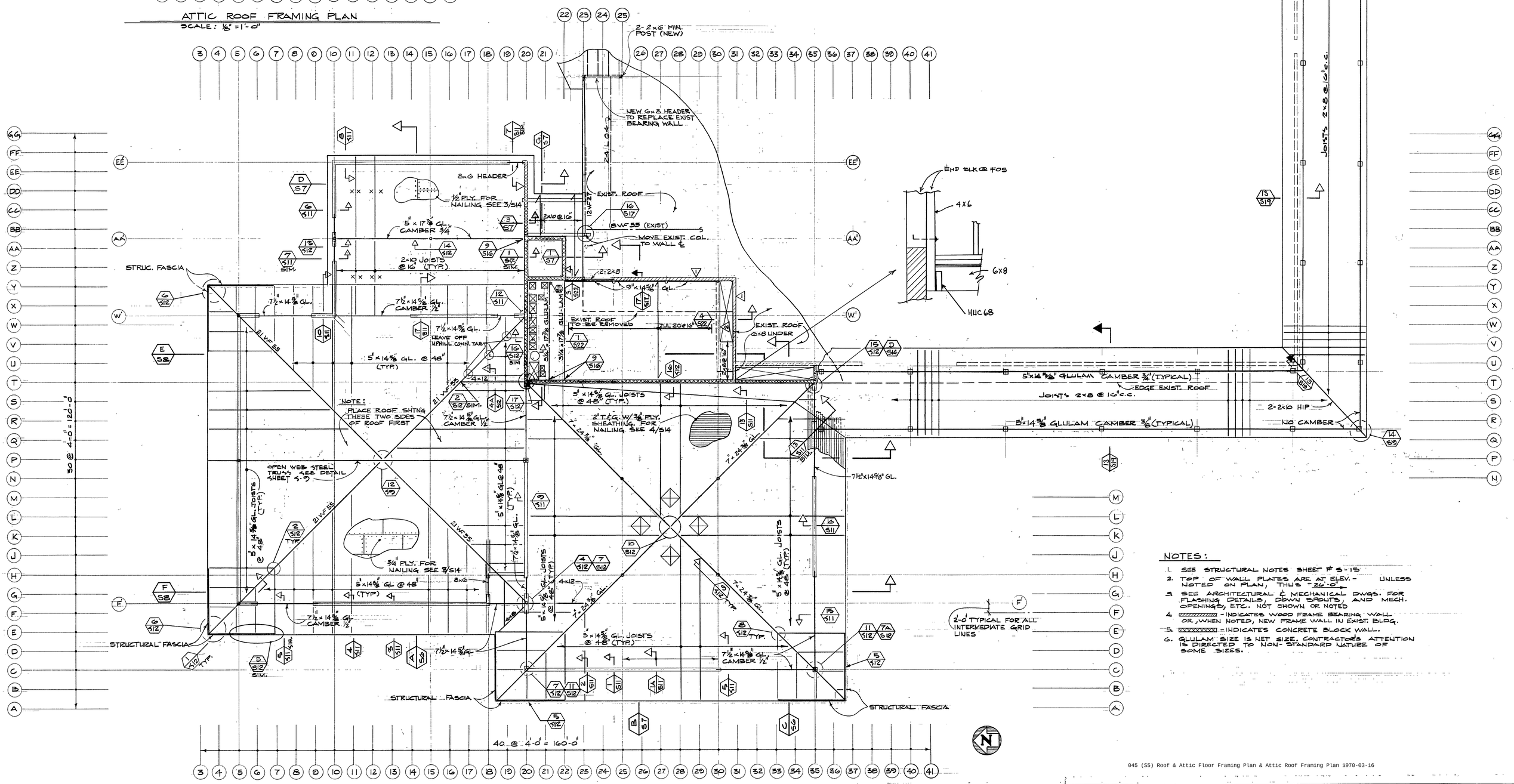

ROOF FRAMING PLAN AND ATTIC FLOOR FRAMING PLAN
SCALE: ⅛" = 1'-0"

NOTES:

1. SEE STRUCTURAL NOTES SHEET # S-15
2. TOP OF WALL PLATES ARE AT ELEV. - UNLESS NOTED ON PLAN, THUS "24'-0"
3. SEE ARCHITECTURAL & MECHANICAL DWGS. FOR FLASHING DETAILS, DOWN SPOUTS, AND MECH. OPENINGS, ETC. NOT SHOWN OR NOTED
4. ▨ - INDICATES WOOD FRAME BEARING WALL OR, WHEN NOTED, NEW FRAME WALL IN EXIST. BLDG.
5. ▩ - INDICATES CONCRETE BLOCK WALL.
6. GLULAM SIZE IS NET SIZE. CONTRACTOR'S ATTENTION IS DIRECTED TO NON-STANDARD NATURE OF SOME SIZES.

045 (S5) Roof & Attic Floor Framing Plan & Attic Roof Framing Plan 1970-03-16

GEOS ENGINEERS
STRUCTURAL ENGINEERS
1620 MONTGOMERY ST., SAN FRANCISCO, CALIFORNIA
SE1887

ROOF AND ATTIC FLOOR FRAMING PLAN AND ATTIC ROOF FRAMING PLAN

DATE: 16 MAR '70
As built

COLLEGE UNION
HUMBOLDT STATE COLLEGE, ARCATA, CALIFORNIA

TRUMP AND SAUBLE, MARVIN TRUMP, ARCHITECT, A.I.A.
202 M STREET EUREKA, CALIFORNIA 95501 TEL. 707 - 442-1554

S5

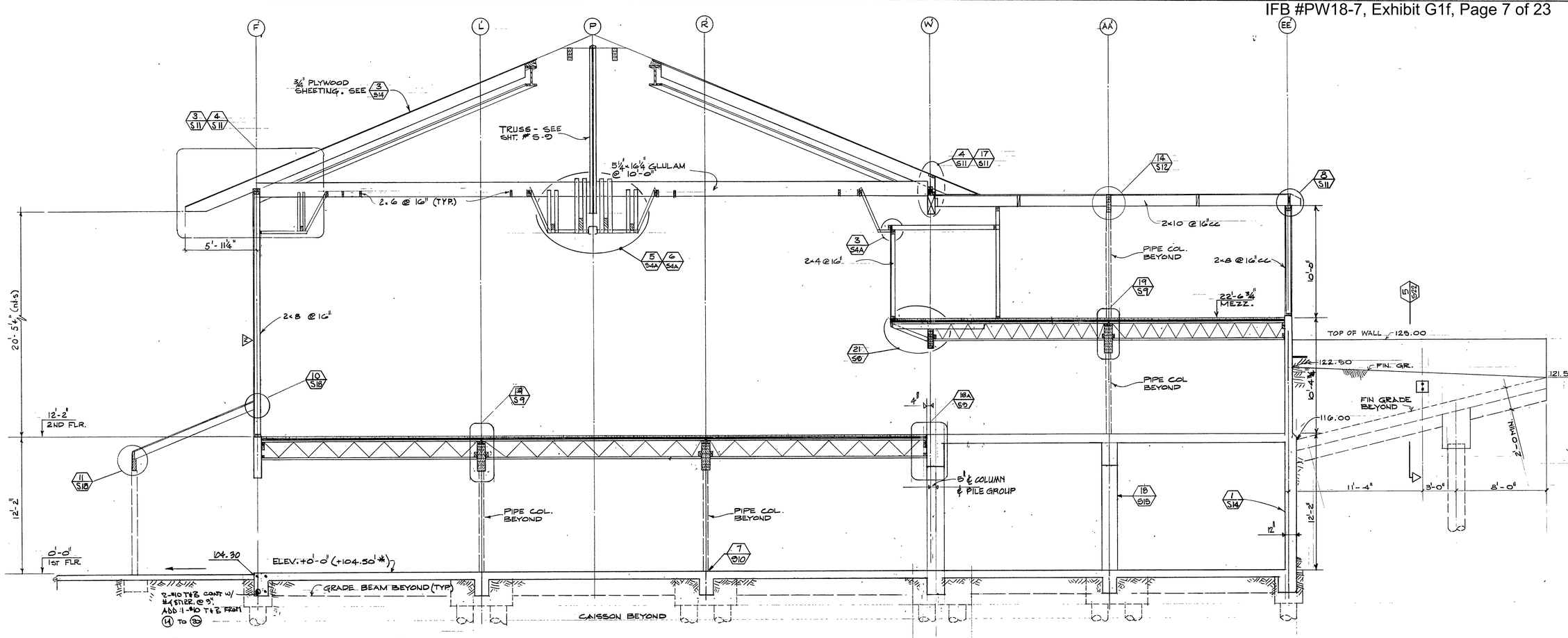

A/SG CROSS SECTION
SCALE : 1/4" = 1'-0"

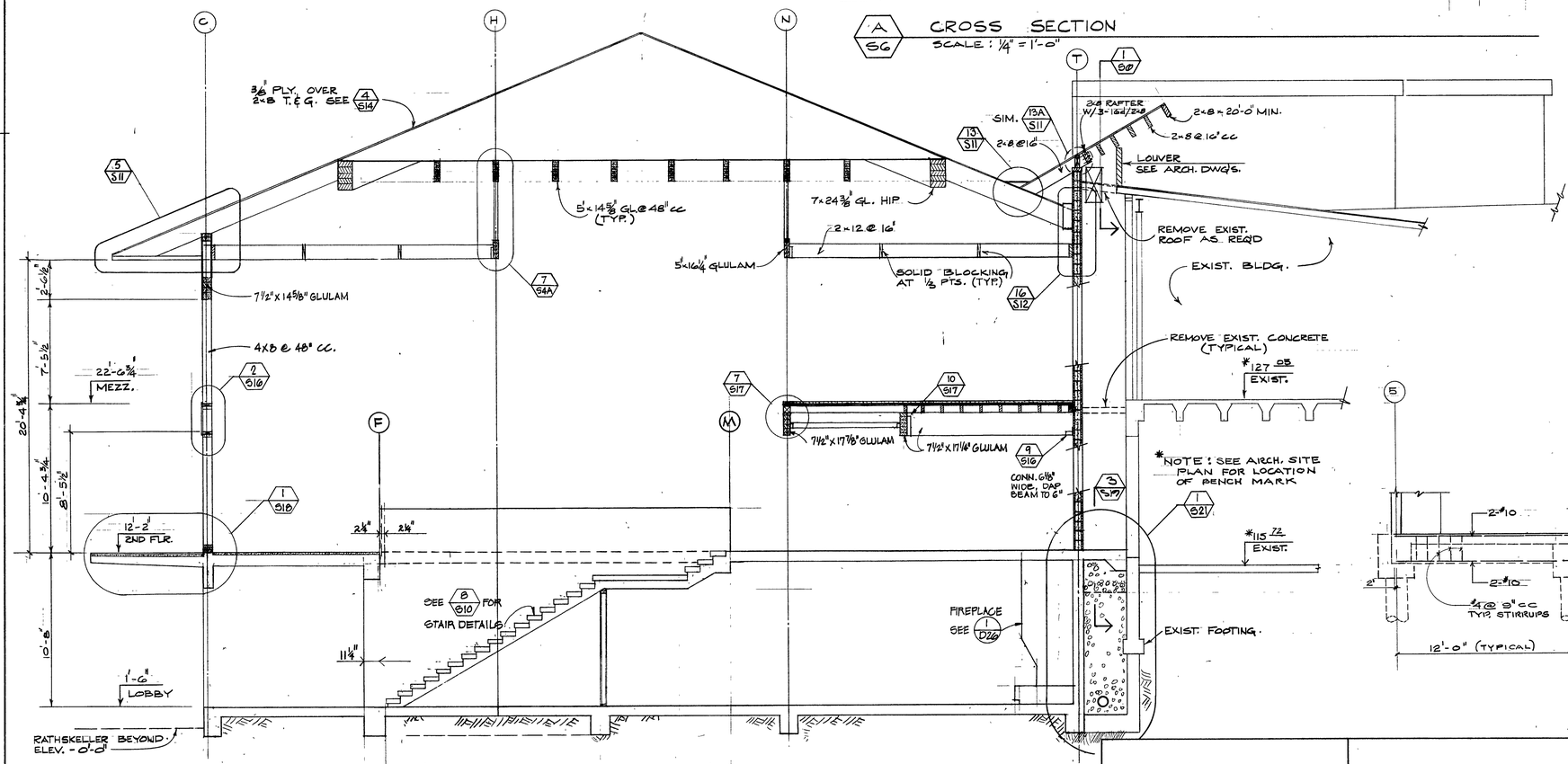

C/SG CROSS SECTION
SCALE : 1/4" = 1'-0"

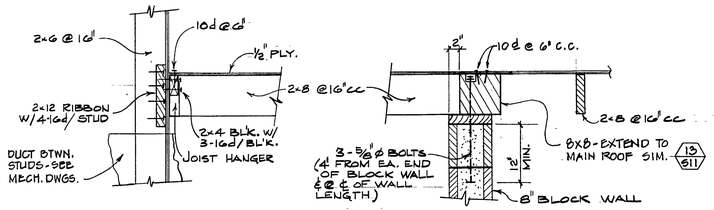

1/SG

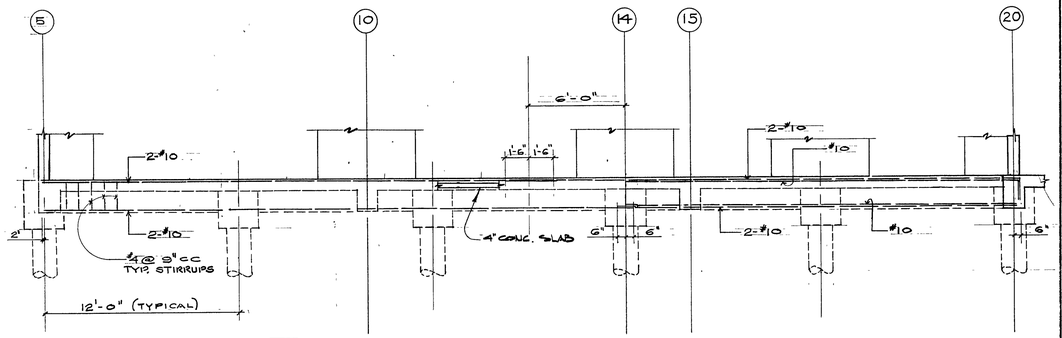

B/SG DETAILS
SCALE : 1/4" = 1'-0"

045 (SG) Cross Sections 1970-03-16

GFDS ENGINEERS
CIVIL & STRUCTURAL ENGINEERS
1620 MONTGOMERY ST. SAN FRANCISCO, CALIFORNIA
SE1327

CROSS SECTIONS

DATE: 16 MAR '70
As built

COLLEGE UNION
HUMBOLDT STATE COLLEGE, ARCATA, CALIFORNIA

TRUMP AND SAUBLE, MARVIN TRUMP, ARCHITECT, A.I.A.
202 M STREET EUREKA, CALIFORNIA 95501 TEL. 707 - 442-1554

SG

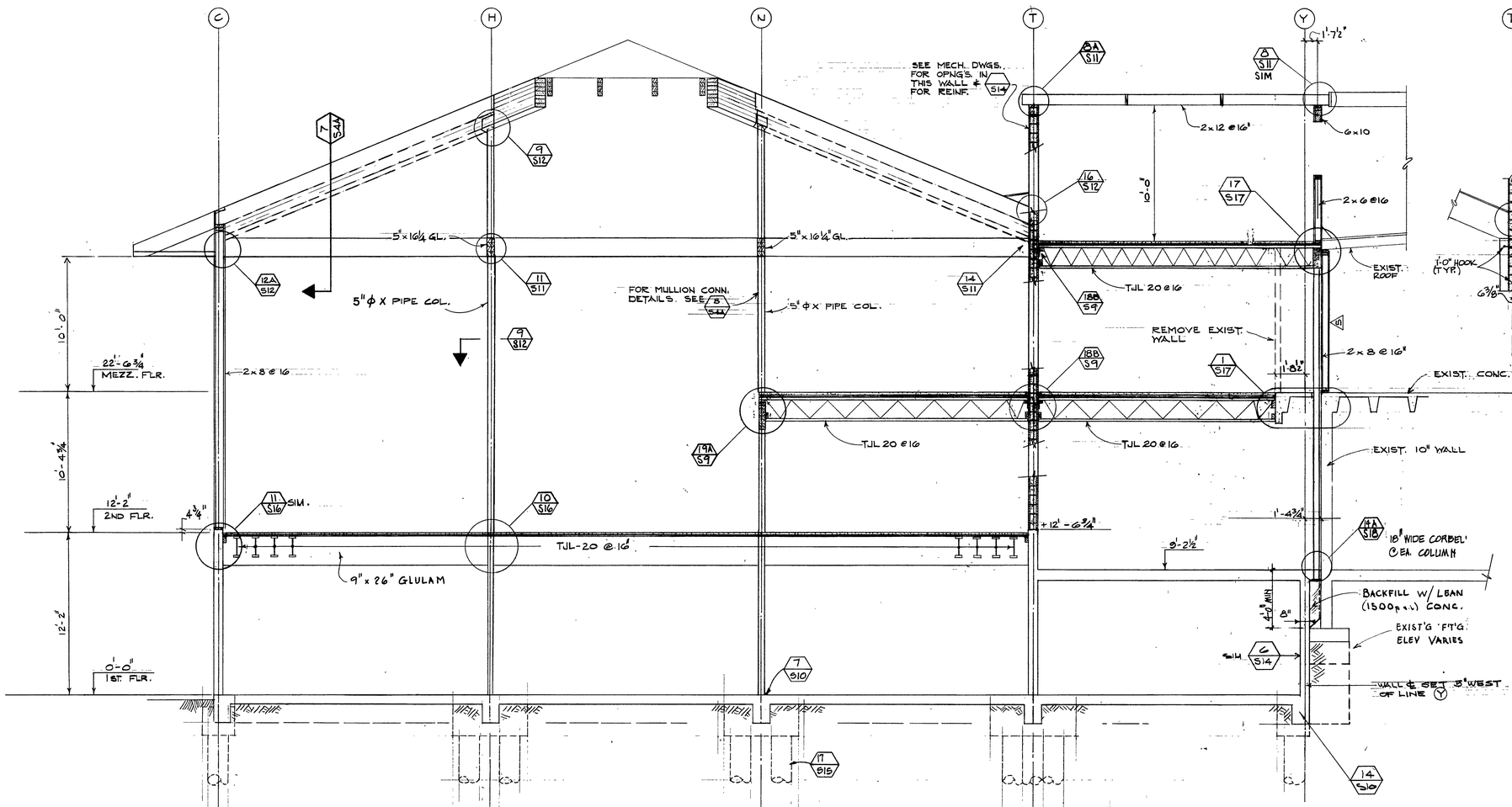

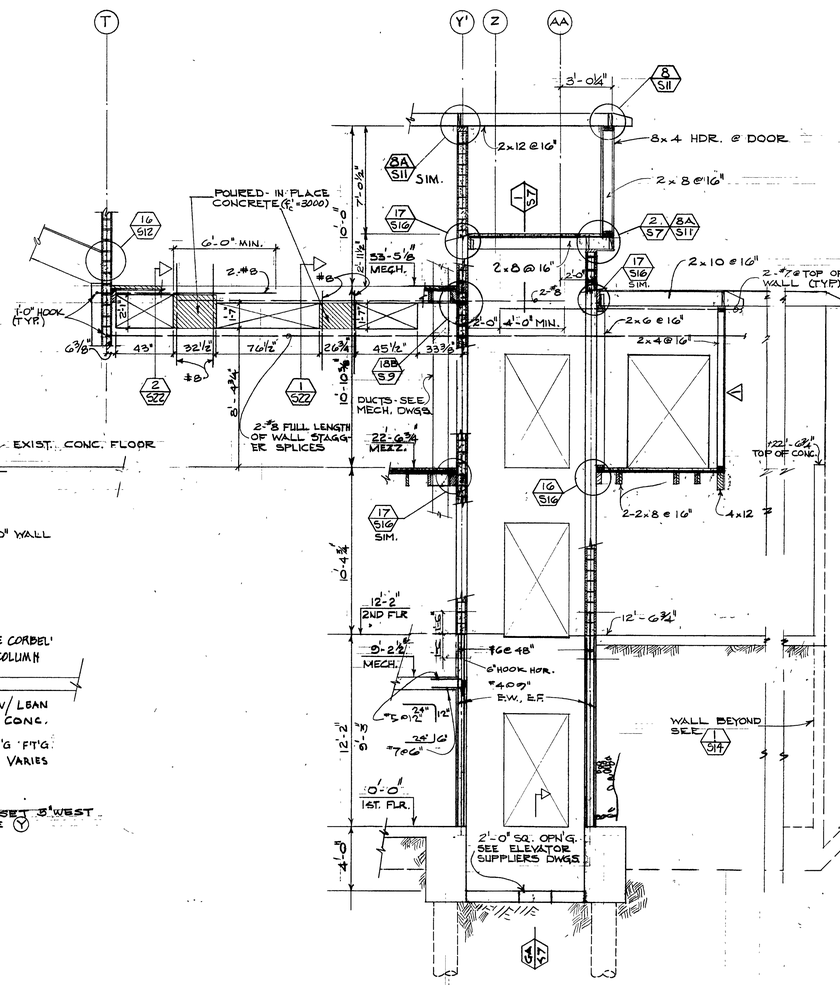

B / S7 CROSS SECTION
SCALE: ¼" = 1'-0"

G / S7 ELEVATOR SHAFT CROSS SECTION
SCALE: ¼" = 1'-0"

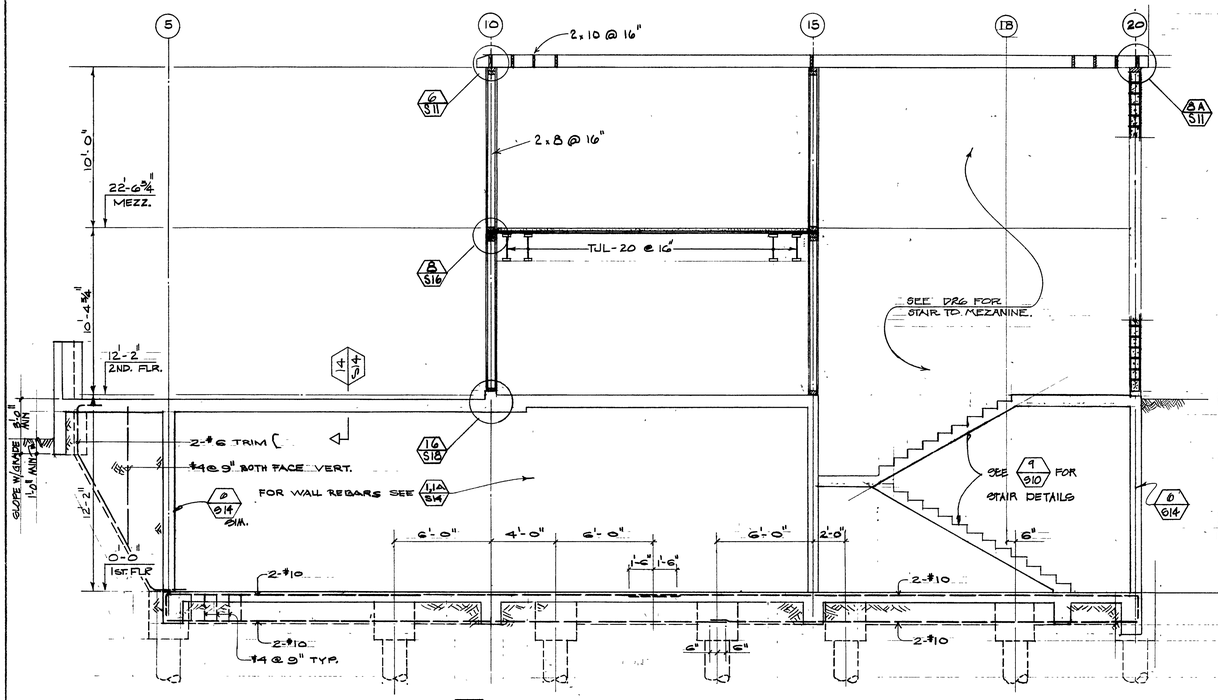

D / S7 CROSS SECTION
SCALE: ¼" = 1'-0"

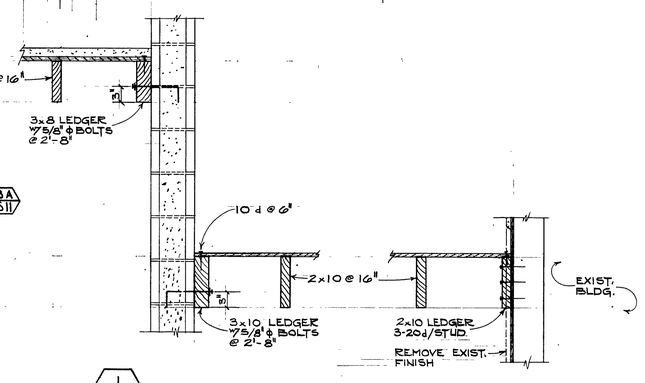

1 / S7

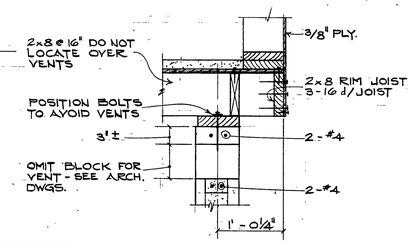

2 / S7

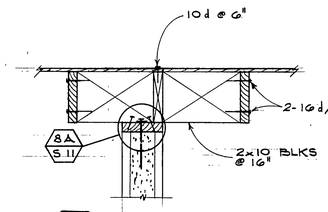

3 / S7

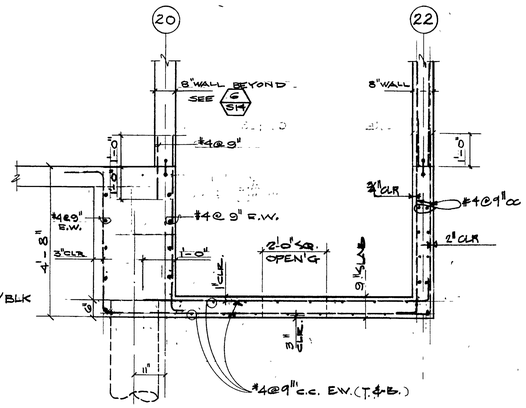

GA / S7 ½" = 1'-0"

045 (S7) Cross Sections 1970-03-16

GFDS ENGINEERS
CIVIL & STRUCTURAL ENGINEERS
1020 MONTGOMERY ST., SAN FRANCISCO, CALIFORNIA
SE1327

CROSS SECTIONS

DATE: 16 MAR '70
As built

COLLEGE UNION
HUMBOLDT STATE COLLEGE, ARCATA, CALIFORNIA

TRUMP AND SAUBLE, MARVIN TRUMP, ARCHITECT, A.I.A.
202 M STREET EUREKA, CALIFORNIA 95501 TEL. 707 - 442-1554

S7

E S8 CROSS SECTION
SCALE: 1/4" = 1'-0"

F S8 CROSS SECTION
SCALE: 1/4" = 1'-0"

045 (S8) Cross Sections 1970-03-16

GFDS ENGINEERS
CIVIL & STRUCTURAL ENGINEERS
1620 MONTGOMERY ST., SAN FRANCISCO, CALIFORNIA
SE1327

CROSS SECTIONS

DATE: 16 MAR '70
As built

COLLEGE UNION
HUMBOLDT STATE COLLEGE, ARCATA, CALIFORNIA

TRUMP AND SAUBLE, MARVIN TRUMP, ARCHITECT, A.I.A.

S8

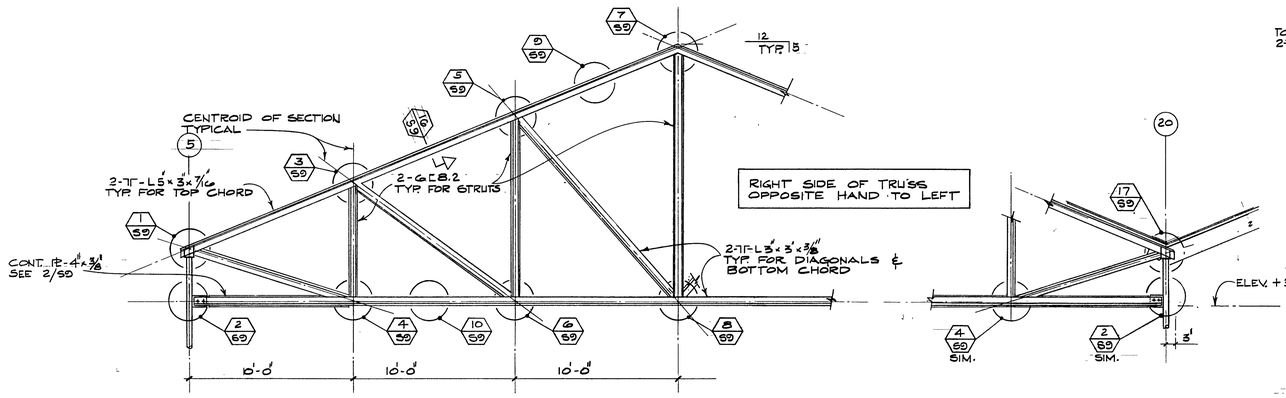

STEEL TRUSS DIAGRAM
NOT TO SCALE

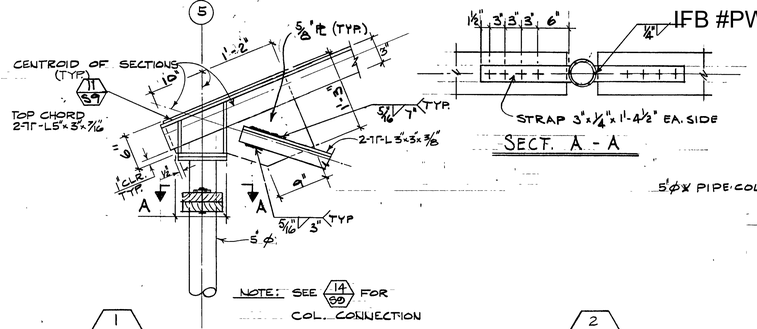

1/S9 SCALE: 1"=1'-0"

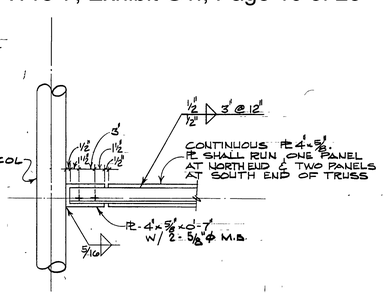

2/S9

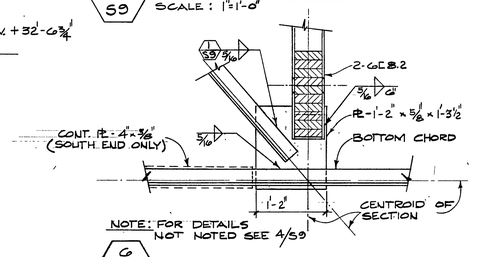

6/S9 SCALE: 1"=1'-0"

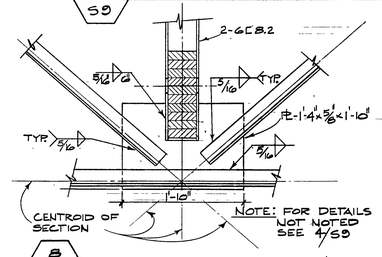

8/S9 SCALE: 1"=1'-0"

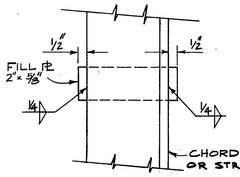

9/S9 TYP. FILL DETAIL
NOT TO SCALE

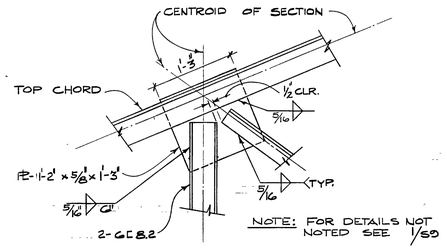

3/S9 SCALE: 1"=1'-0"

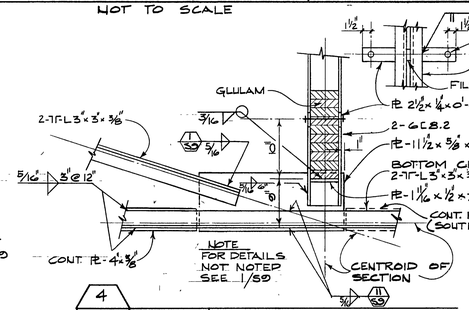

4/S9 SCALE: 1"=1'-0"

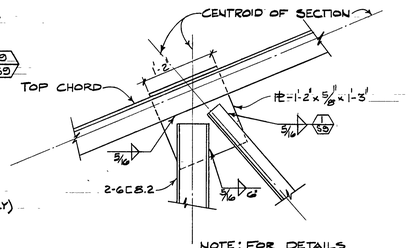

5/S9 SCALE: 1"=1'-0"

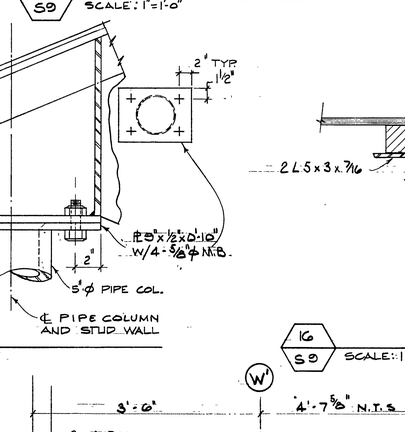

7/S9 SCALE: 1"=1'-0"

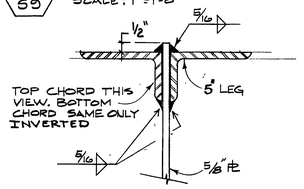

11/S9 TYPICAL CONNECTION
NOT TO SCALE

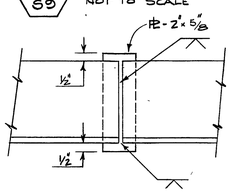

10/S9 TYP. CHORD SPLICE
NOT TO SCALE

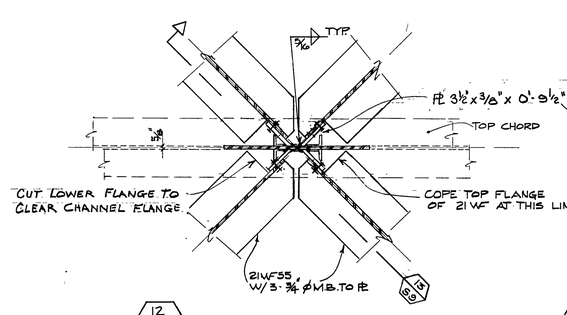

12/S9 SCALE: 1 1/2"=1'-0"

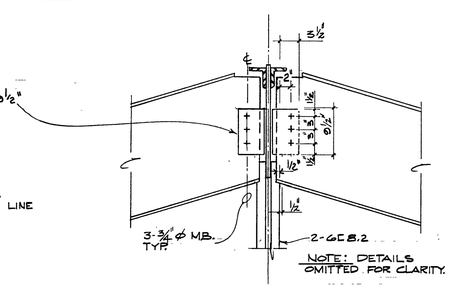

13/S9 SCALE: 1"=1'-0"

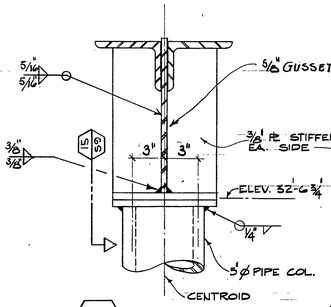

14/S9 NOT TO SCALE

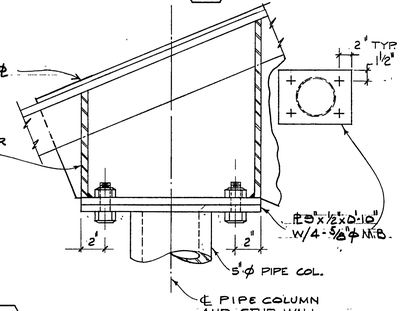

15/S9 NOT TO SCALE

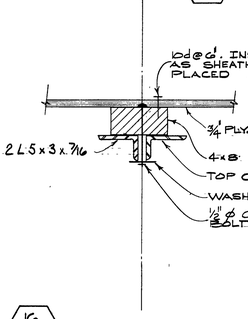

16/S9 SCALE: 1 1/2"=1'-0"

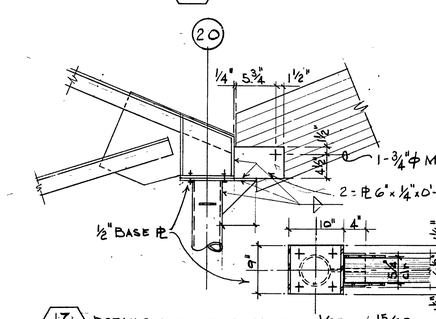

17/S9 DETAILS NOT NOTED SAME AS 1/S9 OR 15/S9
SCALE: 1"=1'-0"

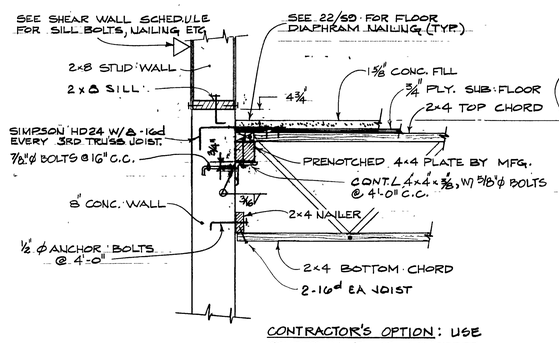

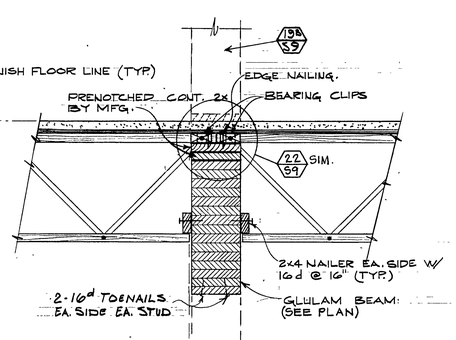

18/S9 TRUSS JOIST BEARING ON LEDGER AT CONCRETE WALL
SCALE: 1"=1'-0"

18A/S9 LEDGER AND NAILER SECURED TO CONCRETE BEAM

18B/S9 LEDGER AND NAILER SECURED TO CONCRETE BLOCK WALL

19/S9 JOIST CONN. AT GLULAM
SCALE: 1"=1'-0"

19A/S9 19B/S9 JOIST ONE SIDE ONLY

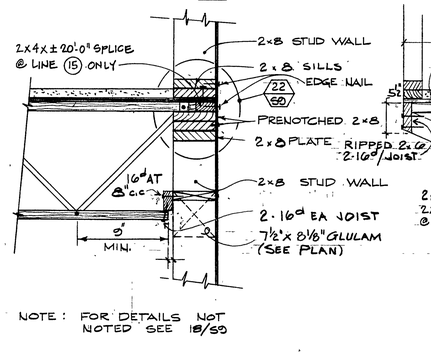

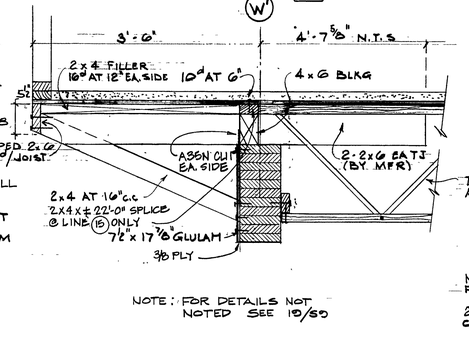

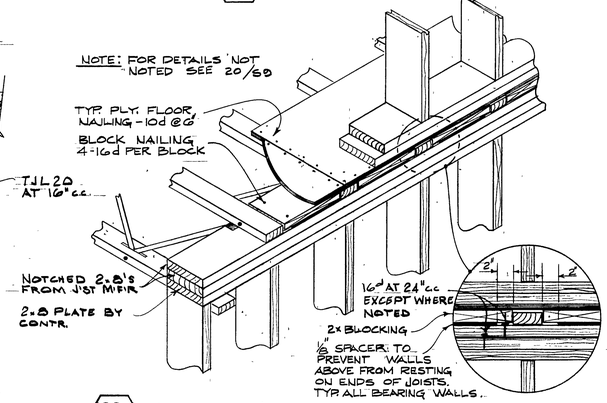

20/S9 TOP CHORD BEARING
SCALE: 1"=1'-0"

21/S9 CANTILEVER AT BEAM
SCALE: 1"=1'-0"

22/S9 TYP. TRUSS JOIST BLOCKING AT BEARING WALLS
NOT TO SCALE

045 (S9) Steel Truss & Truss Joist Connections & Details 1970-03-16

GFDS ENGINEERS
CIVIL & STRUCTURAL ENGINEERS
1620 MONTGOMERY ST., SAN FRANCISCO, CALIFORNIA
SE1327

STEEL TRUSS AND TRUSS JOIST CONNECTIONS AND DETAILS

DATE: 16MAR70
As built

COLLEGE UNION
HUMBOLDT STATE COLLEGE, ARCATA, CALIFORNIA

TRUMP AND SAUBLE, MARVIN TRUMP, ARCHITECT, A.I.A.
202 M STREET EUREKA, CALIFORNIA 95501 TEL. 707 - 442-1554

S9

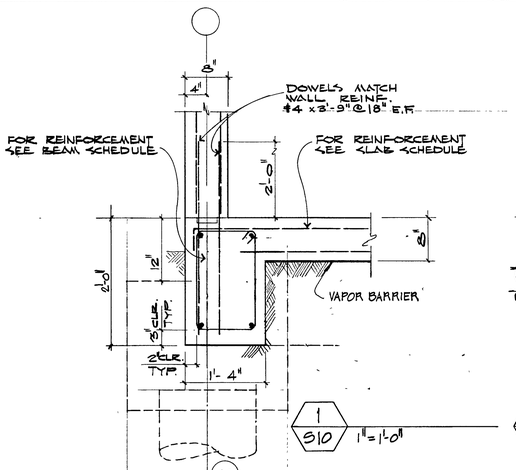

1 / S10 1"=1'-0"

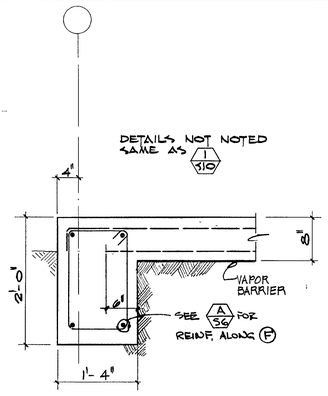

2 / S10 1"=1'-0"

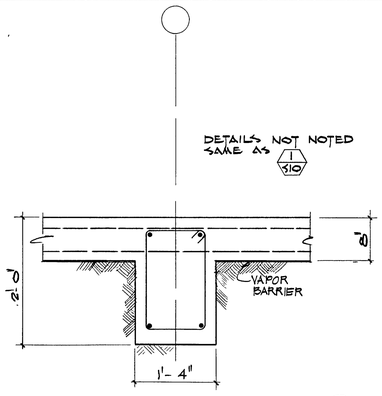

3 / S10 1"=1'-0"

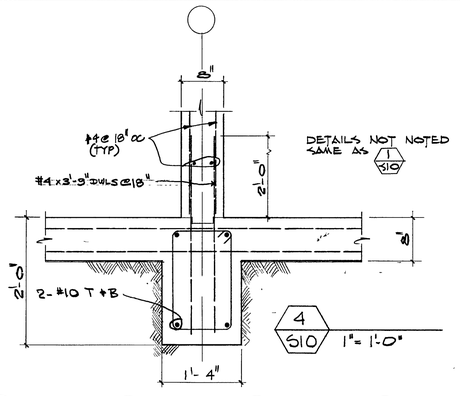

4 / S10 1"=1'-0"

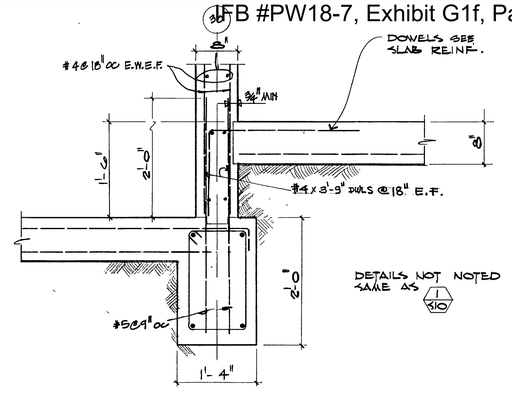

5 / S10 1"=1'-0"

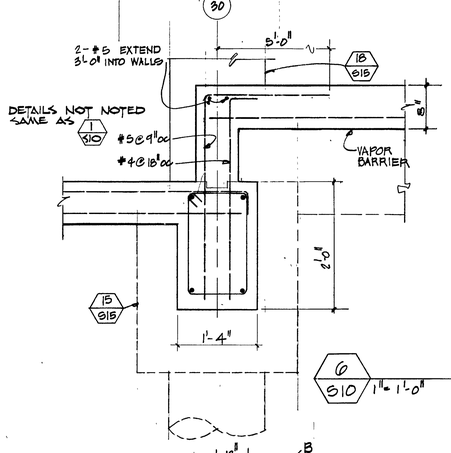

6 / S10 1"=1'-0"

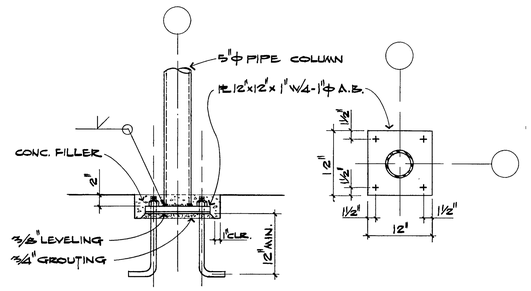

7 / S10 1"=1'-0"

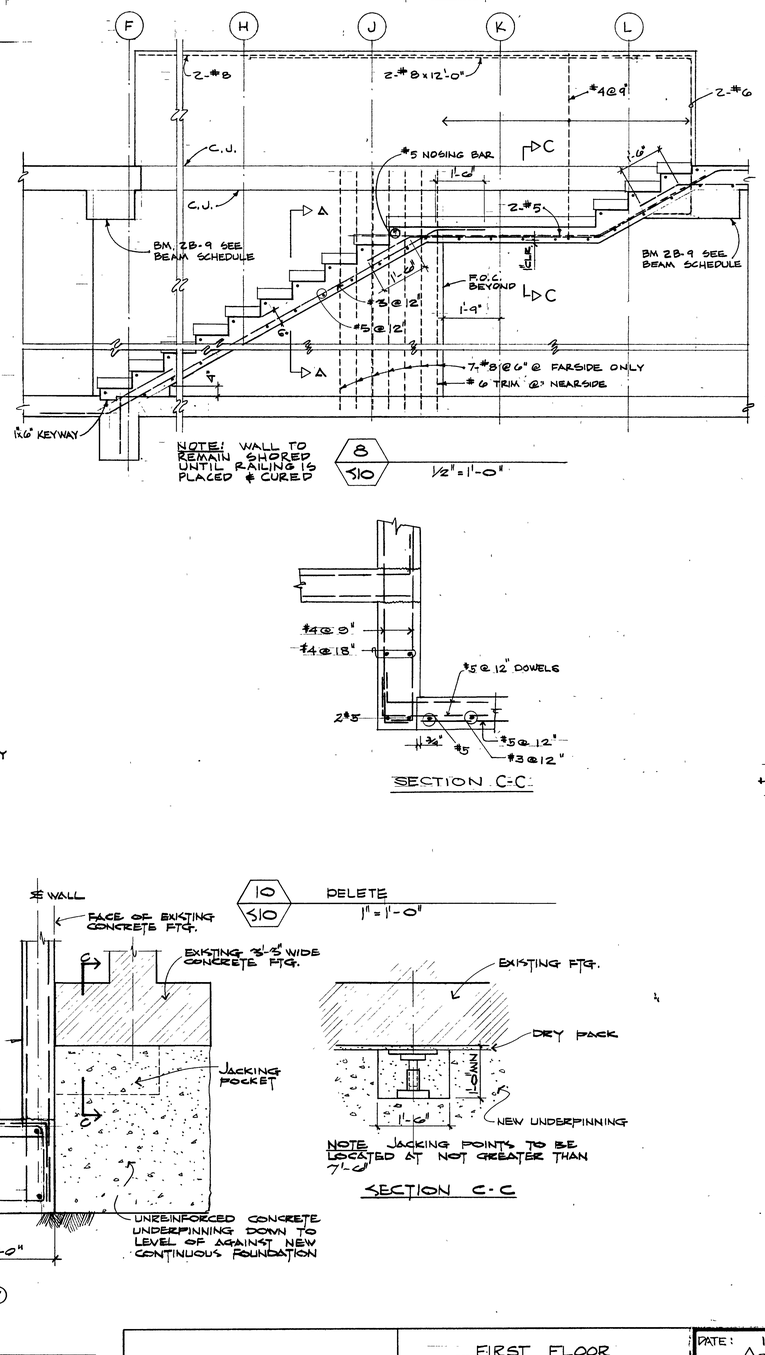

8 / S10 1/2"=1'-0"

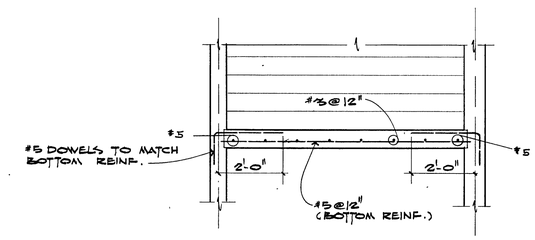

SECTION A-A

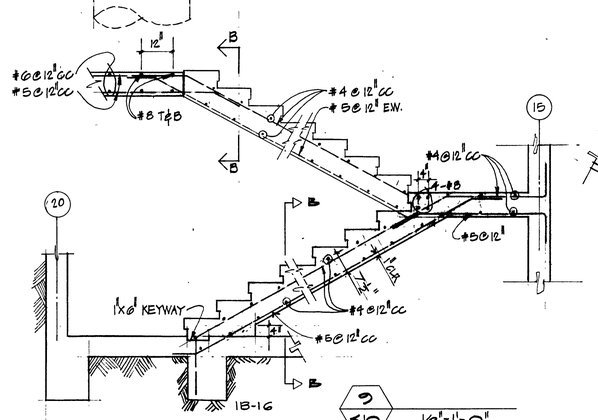

9 / S10 1/2"=1'-0"

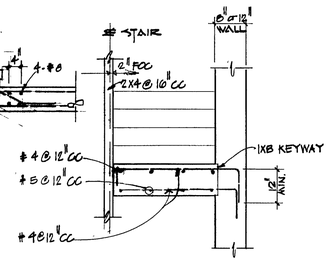

SECTION B-B

SECTION C-C

10 / S10 DELETE 1"=1'-0"

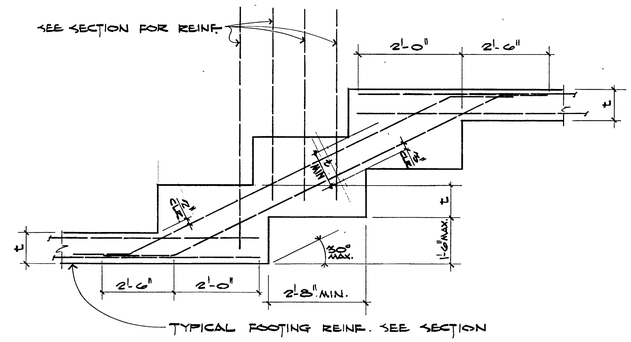

11 / S10 NOT TO SCALE

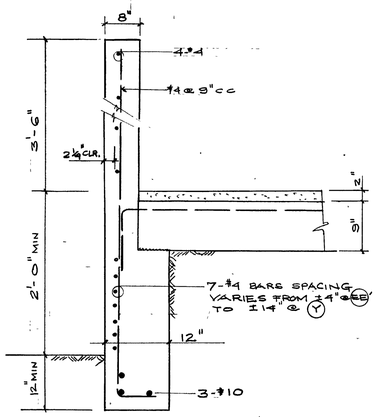

12 / S10 1"=1'-0"

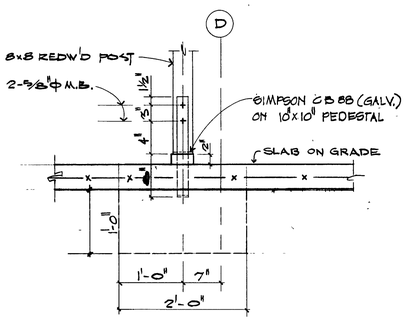

13 / S10 1"=1'-0"

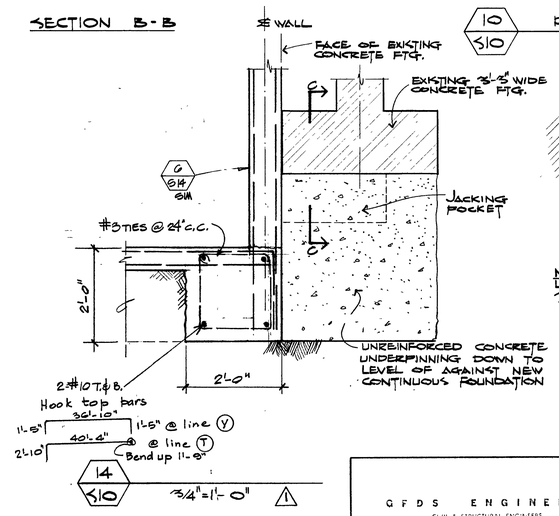

14 / S10 3/4"=1'-0" 1

NOTE Jacking points to be located at not greater than 7'-0"

SECTION C-C

045 (S10) First Floor & Foundation Details 1971-06-07

QFDS ENGINEERS
CIVIL & STRUCTURAL ENGINEERS
1610 MONTGOMERY ST., SAN FRANCISCO, CALIFORNIA
SE1327

FIRST FLOOR AND FOUNDATION DETAILS

DATE: 16 MAR '70
1 7 JUNE '71
As built

COLLEGE UNION
HUMBOLDT STATE COLLEGE, ARCATA, CALIFORNIA

TRUMP AND SAUBLE, MARVIN TRUMP, ARCHITECT, A.I.A.
202 M STREET EUREKA, CALIFORNIA 95501 TEL. 707-442-1554

S10

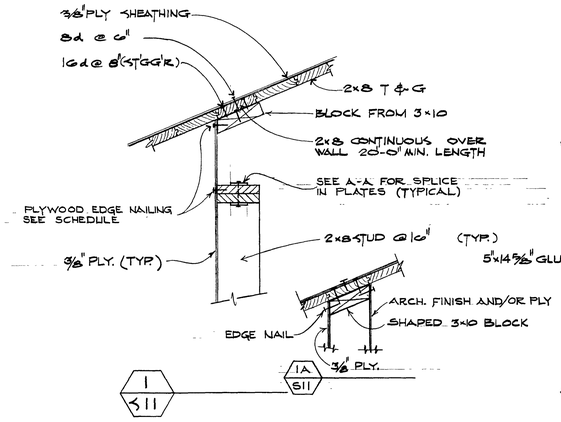

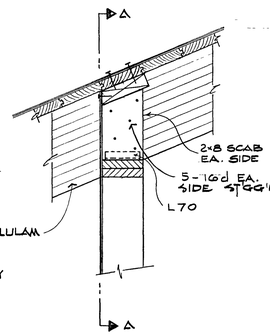

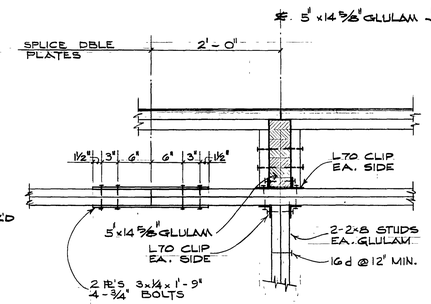

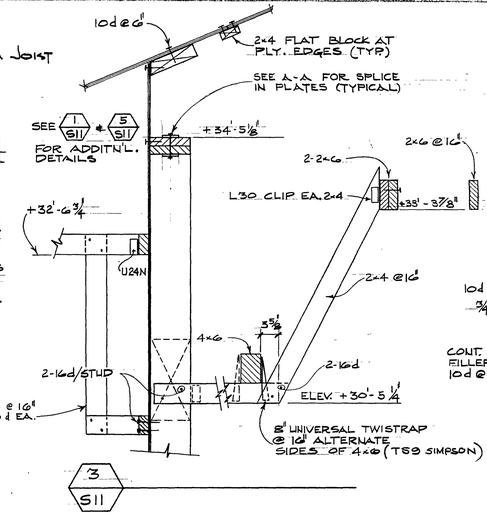

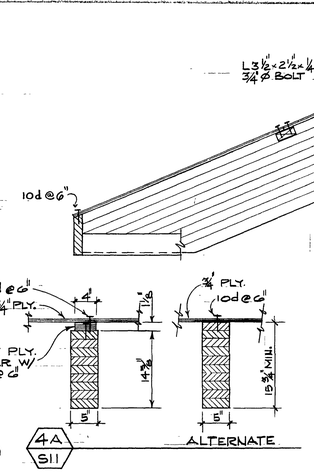

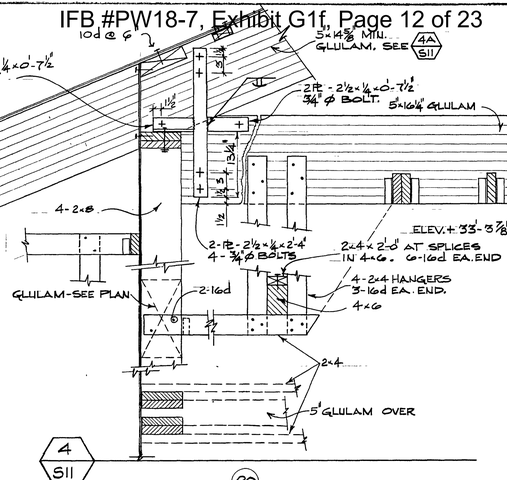

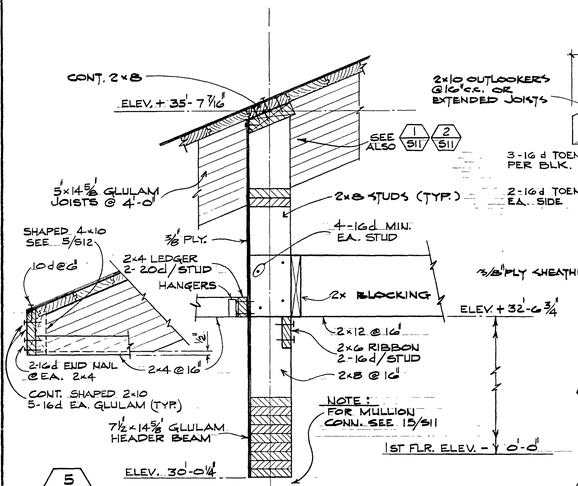

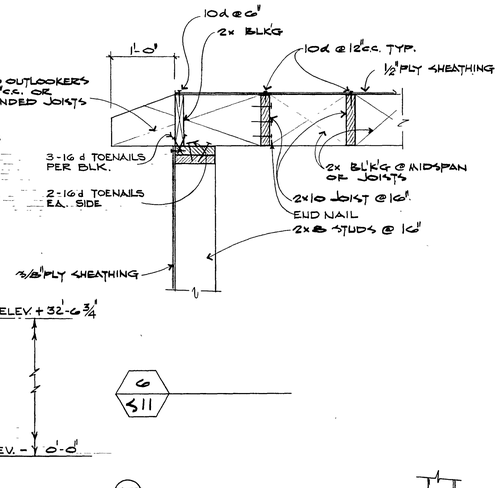

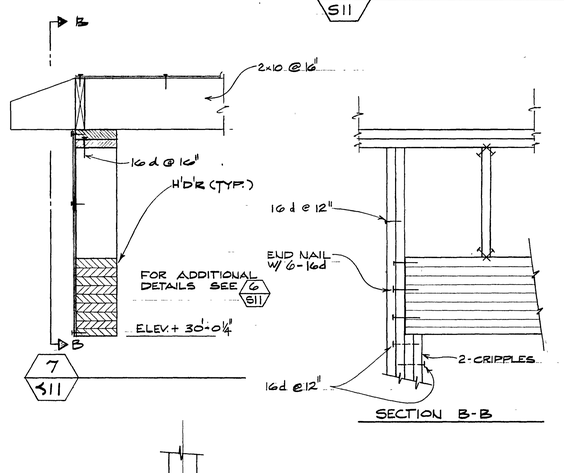

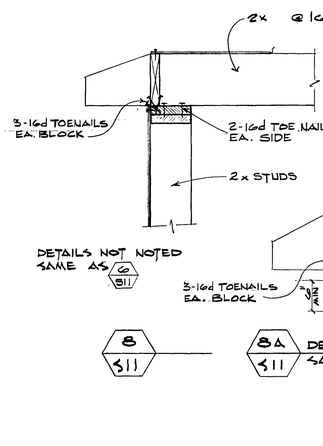

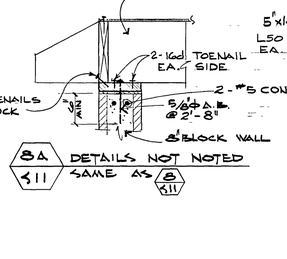

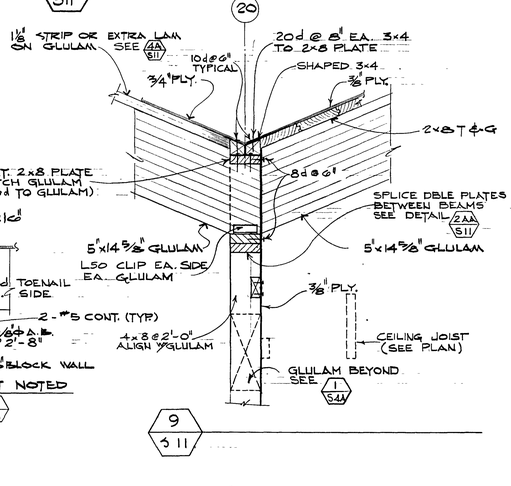

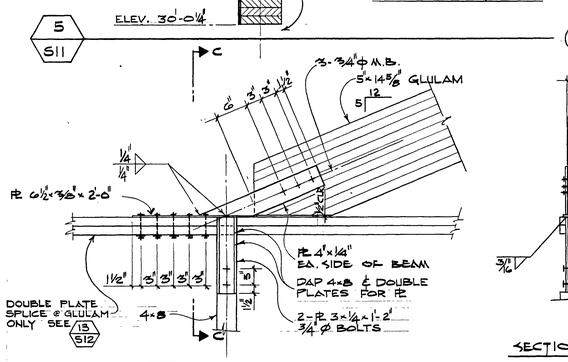

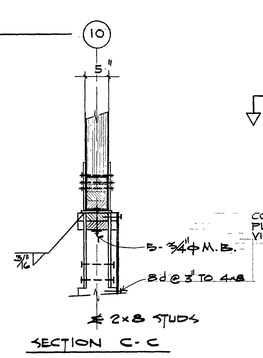

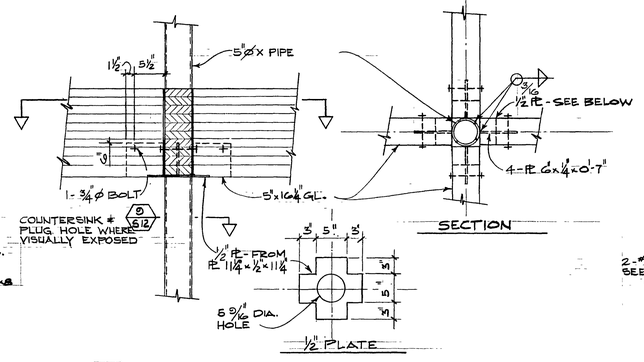

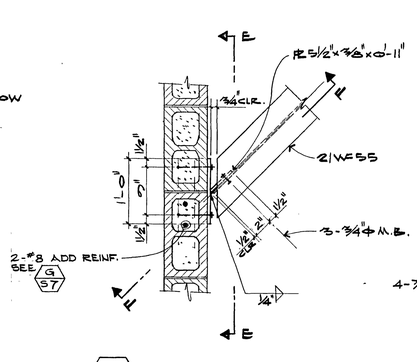

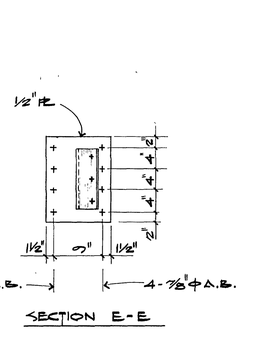

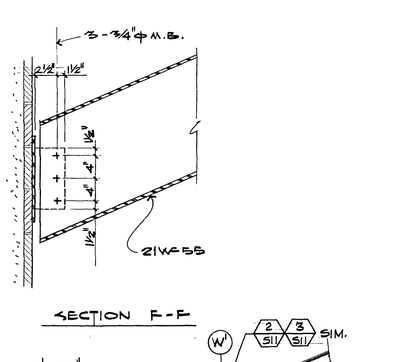

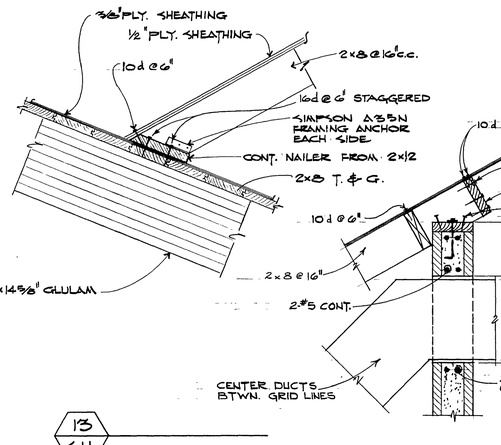

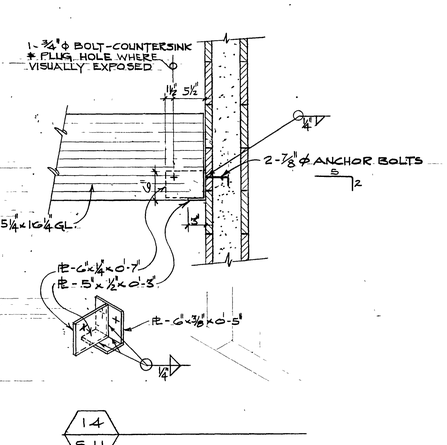

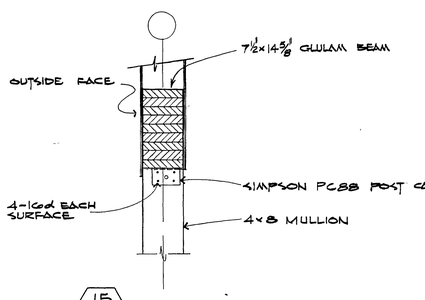

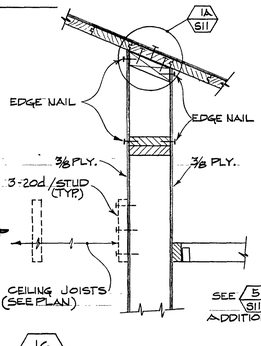

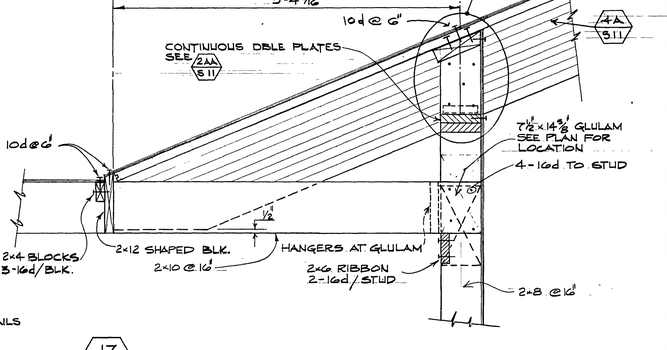

045 (S11) Roof Details 1970-03-16

GFDS ENGINEERS
CIVIL & STRUCTURAL ENGINEERS
1620 MONTGOMERY ST., SAN FRANCISCO, CALIFORNIA
SE1327

ROOF DETAILS

DATE: 16 MAR '70
As built

COLLEGE UNION
HUMBOLDT STATE COLLEGE, ARCATA, CALIFORNIA
TRUMP AND SAUBLE, MARVIN TRUMP, ARCHITECT, A.I.A.
202 M STREET EUREKA, CALIFORNIA 95501 TEL. 707 - 442-1554

S11

SECTION C-C

SECTION A-A

SECTION B-B

SECTION D-D

SECTION E-E

SECTION F-F

SECTION G-G

SECTION J-J

SECTION K-K

SECTION L-L

STRUCTURAL FASCIA

SECTION M-M

SECTION N-N

SECTION P-P

SECTION Q-Q

SECTION R-R

SECTION S-S

SECTION T-T

SECTION U-U

GFDS ENGINEERS CIVIL & STUCTURAL ENGINEERS 1620 MONTGOMERY ST., SAN FRANCISCO, CALIFORNIA Edward G. Fuhrmann SE1327	ROOF DETAILS

DATE: 16MAR70 As built	COLLEGE UNION HUMBOLDT STATE COLLEGE, ARCATA, CALIFORNIA TRUMP AND SAUBLE, MARVIN TRUMP, ARCHITECT, A.I.A. 202 M STREET EUREKA, CALIFORNIA 95501 TEL.: 707-442-1554	S12

045 (S12) Roof Details 1970-03-16

SLAB AND BEAM SCHEDULE

NOTES: N-S BARS PLACED 1ST & LAST
E-W " " 2ND & 3RD

MARK	SECTION	NORTH WEST SUPPORT / SOUTH EAST SUPPORT	REMARKS
1B-1 *(1B-1A)	8" 12"MIN. 2"CLR 2'-0" 3"CLR 1'-4"	(C)(F)(5)(20)(20) (H)(L)(10)(15)(25) 2-#10 #4 STIRRUPS 8@8" REMAINDER @ 12" NONE @ (5) 11'-6" 1'-6" TYP. 8@8" 10'-0" 8'-0" 2" 1'-6" 20'-0" MAX. 2-#10 1'-6" 6"	EXTEND WHERE REQ'D AND LAP 2'-0" W/ADJACENT BARS * 1B-1A OPPOSITE HAND STIRRUPS TYPICAL FOR ALL BEAMS UNLESS NOTED OTHERWISE. 1B-1A @ (5) 12'-0" (40) (41) 3-#10
1B-2 (1B-2A)	SEE 1B-1	(H)(10)(L)(W) (N)(15)(R)(AA) 2' 2-#10 6" 20'-0" MAX. 2-#10 6"	ONLY BOTTOM BARS SCHEDULED. * PROVIDE ADDITIONAL 4-#10 TOP BARS @ 1B-2A TOP HOOK 1'-5" AT LINE (30) 11'-0" (30) 3-#10 5'-0"
1B-3 *(1B-3A)	SEE 1B-1	(N)(R)(30) (T)(W)(35) 8'-0" 8'-0" 2-#10 2-#10 MATCH BAND FROM 1B-15 8'-0" 8'-0" 11'-6" 2'-0" 2-#10 2'-0" 3'-6" 6" 20'-0" 2-#10 6"	* AT 1B-3A HOOK TOP BARS DOWN 2'-10" AND EXTEND 2-#10 BOTTOM BARS 4'-0" AT LINE (30)
1B-4	3'-6" 8'-0" 8'-0" 16'-0"	(U) 2-#10 (COND. TO EXTENSION PT. 1B-3) (EE) 2-#10 2-#10 6" 2"	8" WALL DOWELS REQ'D. FOR STAIR WALL
1B-5	SEE 1B-4	(C) (F) (H) 2-#10 8'-3" 8'-3" #4 STIRRUPS @12" THRU OUT 2-#10 2'-0" 14'-0" 6'-0" 21'-9" HOOK HORIZ. 1'-5" AND LAP WITH BARS AROUND CORNER	8" WALL DOWELS REQ'D.
1B-6	SEE 1B-4	(T) 21'-9" 8'-3" 2-#10 (W) 8'-0" 2-#10 #4 STIRRUPS @12" THRU OUT 2-#10 HOOK HORIZ. 1'-5" 14'-0"	
1B-7	SEE 1B-4	(T) 12'-6" (Y) 2-#10 2-#10 1'-6" 6" 11'-6" 20'-0" 2-#10 1'-6" 2"	
1B-8	1'-6" 2'-0"	(H) (N) #4 STIRRUPS 2'-0" 12@8" 2-#10 8@8" 2'-0" 6" 20'-0" 2-#10 6"	ONLY BOTTOM BARS SCHEDULED
1B-9		(T) 2-#10 (Y) PROVIDE #6 @ OPNG #4 @ 12" THRU OUT 1'-6" 6" 20'-0" 2-#10 2"	
1B-10		(C) HOOK HORIZ. 1'-9" AND LAP WITH BARS FROM 1B-15 ON LINE (C) 2-#10 (F) 23'-6" #4 @ 12" THRU OUT 2-#10 2" 12'-0" 28'-6"	
1B-11		(H) 1'-6" (L) 1'-6" (N) 2-#10 2" (T) REBARS FR. 1B-10 #4 @ 12" THRU-OUT HOOK HOR. 1'-9" 6" 6" 2-#10	
1B-12		(20) (25) (30) 4'-0" 4'-0" #4 STIRRUPS @ 10" 2-#9 1'-3" 2-#9 20'-0" 20'-0"	
1B-13		(L) (P) (R) 5'-0" #11 2-#10 10'-0" STRPS #4 @ 12" THRU OUT 8'-0" 2-#9 6" 10'-0" 10'-0" 6"	
1B-14		(E) 6'-2" 2-#10 (W) 8'-0" 6'-0" 4'-0" STRPS #4 @ 12" 2'-0" 2-#10 1'-#10 2'-0" 20'-0"	
1B-15		(30) (35) HOOK HORIZ. 1'-9" AND LAP WITH BARS FROM 1B-10 6" 1'-6" 2-#10 2-#10 4'-0" 20'-0" 2"	
1B-16		(18)(30) (20)(35) 2-#9 4-#10 1'-6" 2" 20'-0" 2"	
1B-17	1'-9" 1'-4"	1'-2" 4-#9 1'-2" #3 @ 9" THRU OUT 4-#9 LAP AT MIDSPAN 2'-5" LAP AT MIDSPAN 2'-5"	
1B-18		* 3-#7 #3 @ 9" THRU-OUT 3-#7 *	* ENDS DEPEND ON SUPPORT CONDITION

MARK	SECTION	NORTH WEST SUPPORT / SOUTH EAST SUPPORT	REMARKS
2B-1	2-#10 9" 1'-6" 3'-0"	(5) 3'-6" 4-#10 2-#10 (10) 12'-6" #4 STIRRUPS 9'-0" 8'-0" REMAINDER @ 12" 6@6" 8@4" 2'-0" 2" 1'-6" 20'-0" 2-#10 9"	PROVIDE 6-#7 IN WALL AT BEAM (TYPICAL) BEAM 6-#7
2B-2	SEE 2B-1	(10) (15) #4 - STIRRUPS 8@4" 6@6" REMAINDER @ 12" 6@6" 8@4" 3" 1'-3" 2-#10 2'-3" 3" 20'-0"	ONLY BOTTOM BARS SCHEDULED.
2B-3	SEE 2B-1	(15) (22) 12'-6" 2-#10 4-#10 8'-0" 9'-0" #4 STIRRUPS 8@4" 6@6" REMAINDER @ 12" 1'-3" 3" 2'-0" 2-#10 1'-6" 2"	SEE 2B-1.
2B-4	2-#11 2'-0" 1'-6"	(5) 1'-6" 3-#11 2-#11 (10) 13'-0" #4 STIRRUPS 10@6" REMAINDER @ 12" 10@6" 2" 10'-0" 9'-0" 1'-6" 2-#11 20'-0" 1'-#14 2'-0" 6"	SEE 2B-1
2B-5	(BUNDLED) 3-#11 2-#11 1'-6"	(10) (15) #4 STIRRUPS 2-#11 BUNDLED 7'-0" 8'-0" 2'-0" 10@6" REMAINDER @ 12" 6@6" 8@4" 2'-0" 6" 2'-11 20'-0" 1'-#6 6"	
2B-6	SEE 2B-5	(15) (20) 13'-0" 2-#11 3-#11 9'-0" 10'-0" #4 STIRRUPS 9@4" 5@6" REMAINDER @ 12" 12@5" 1'-3" 6" 2'-0" 2-#11 20'-0" 2-#14 2'-0"	SEE 2B-1
2B-7	8" 9"SLAB 4'-5" NTS	(22) (25) 2 BUNDLES 2-#8 #4 @ 16" TYP WALL BARS HOOKED TOP & BOTTOM 2-#8 CONT. 9'-6" 6" 2-#6 12'-0" 2-#6 6"	PROVIDE 2-#6 TOP & BOTTOM @ OPENG'S
2B-8	SEE 2B-7	(22) 2-#8 (CONT'D fr. 2B-7) 2'-6" (28) #4@16" (TYP. WALL BARS HOOKED TOP & BOTTOM 6" 2-#6 9'-6"	PROVIDE 2-#6 TOP & BOTTOM @ OPEN'GS
2B-9	1'-3" 1'-6" 1'-3¾"	(30) 2-#10 (35) USE #4@12" 4-#9 2-#9 3'-9" 9" 20'-0" 3'-9" 2" 2"	SEE 2B-1
2B-10	3'-3" MIN. 8"	FACE OF OPENING 2-BUNDLES 4-#4 @ 4½" I.F. O.F. #4@16" TYP. WALL BARS HOOKED TOP & BOTTOM 2-#8 CONT. TRIM 6" 2-#6 2-BUNDLES 2'-0" 9'-6" MAX. 2'-0"	USE #4@16" I.F. O.F. FOR 2B-10 @ LINE (F) AT LINE 60 USE 4-#6 TOP BARS W/ 2-#8 CONT. AND 2-#6 TRIM TO 10'-6"
2B-11	SEE 2B-10	SIMILAR TOP & BOTTOM BARS 2B-10 USE #4 @ 10" EA. FACE FOR STIRRUPS	
2B-12	SEE 2B-9	2B-9 SIMILAR	
2B-13	2'-0" 3'-0" 2'-0"	(30) 2-#10 2-#9 (35) 8'-2" 3'-0" DOORWAY #4 STIRRUPS @ 6" 2-#11 2'-0" 2'-0" 20'-0"	VERIFY OVERALL BEAM DEPTH WITH ARCHITECTURAL WINDOW DETAILS.
2B-14	SEE 2B-10	(C) 2-#6 CONT. TRIM 2-#6 (F) 2 BUNDLES 14'-0" MIN 1'-6" HOOK HORIZ. 1'-6" 2-#6 CONT. TRIM 2" 2-#6 14'-0" 6"	SEE 2B-7 FOR STIRRUPS. DELETED
2B-15	SEE 2B-10	(F1) 6" 2-#6 x 6'-10" 2'-6" 2-#6 x 11'-0" (K)	SEE 2B-7 FOR STIRRUPS. ONLY BOTTOM BARS SCHEDULED
2B-16	SEE 2B-10	(T) 2-#8 CONT. (W) 2-#8 CONT. 4'-10" 2-#6 2-#6 8'-2" 6" 4" 14'-0" 9'-8"	SEE 2B-7 FOR SHEAR REINF.
2B-17 2B-17A	1'-9" 2'-0"	(T) 3-#8 (Y) #4 STIRRUPS 15 SINGLE REMAINDER @ 10 DOUBLE 3-#8 2" *	* 2'-2" @ 2B-17A DELETED
2B-18 (2B-18A)		2-#6 CONT. 2-#6 2 BUNDLES 2'-6" 2-#6 CONT. 2-#8 2 BUNDLES 2'-6" 2'-0" 6" FACE OF OPENING 6" 2'-0"	2B-18A OPP. HAND SEE 2B-7 FOR SHEAR REINF.

MARK	SECTION OR SLAB THICKNESS	NORTH WEST SUPPORT / SOUTH EAST SUPPORT	REMARKS
2B-19	SEE 2B-13		
2B-20	18" 2'-6" MIN.	2-#8 CONT. (STOP @ DOORWAY) (T) 2-#8 CONT. #4@16" THRU-OUT 2-#6 SPEND 1'-0" 6" 2'-0" FACE OF OPENING 2"	FOR ALL DETAILS NOT NOTED SEE 2B-10 END CONDITION @ LINE (N) SAME AS AT NORTH WEST SUPPORT
MB-1	1'-8" 1'-2"	4-#10 #4@9" THRU OUT 1'-3" 5" 12'-0" 2-#10 5"	
MB-2 MB-3 MB-4 MB-5	2'-0" 1'-4"	7'-0" 7'-0" 2-#10 #4@12" THRU OUT 3-#10 3'-4" VARIES 20'-0" TO 20'-3" SEE PLAN CONT. SUPP. DISCONT. SUPP. 8"	*HOOK 1'-7" @ NON-CONT. SUPPORT MAY LAP BOTTOM BARS @ EVERY 2½ SUPPORT.
1S-1	8"	#5@16" #5@16" 10'-9" 1'-3" TYP. #5@9" 9'-0" 8'-0" 2" 20'-0" 6"	¾" clr 2" clr
1S-2	8"	ONLY BOTTOM BARS SCHEDULED #5@11" 6" 20'-0" 6"	
1S-3	8"	10'-9" #4@16" #5@16" #4@16" 8'-9" 7'-0" 7'-0" 7'-0" 6'-0" #5@11" 6" 20'-0" 6"	
1S-4	8"	ONLY BOTTOM BARS SCHEDULED #5@15" 6" 16'-0" 6"	
1S-5	8"	6'-9" #4@16" #5@16" 6'-0" 7'-6" #5@15" 6" 16'-0" 2"	
1S-6	8"	#5@16" #4@16" 10'-9" #5@11" 9'-0" 7'-0" 2" 20'-0" 6"	OPP HAND FOR (35) — (40) (30) 10'-9" (40) 6" 20'-0" 2" TRANSVERSE BARS T&B #5@16" I.F.
1S-7	8"	ONLY BOTTOM BARS SCHEDULED #5@14" 6" 20'-0" 6"	
1S-8	8"	10'-9" #4@16" 10'-9" 7'-0" 7'-0" #4@16" #4@16" 7'-0" 7'-0" #5@14" 6" 20'-0" 6"	NOTE: HOOK TOP BARS DOWN AT ELEVATOR PIT DEPRESSED SLAB.
1S-9	8"	10'-9" #4@16" #4@16" 8'-9" 7'-0" 7'-0" #5@14" 7'-0" 6'-0" 6" 20'-0" 6"	
1S-10	8"	10'-9" #5@16" #5@18" 6" VARIES (20'-0" MAX.) 2"	
1S-11	8"	#5@9" #5@16" 10'-9" 6" 20'-0" 2" *	*EXTEND 2'-0" AT ELEVATOR
1S-12	8"	10'-9" #5@16" #5@16" #5@11" 7'-0" 6" 20'-0" 3'-5"	
1S-13	8"	10'-9" #5@16" #5@16" #5@14" 7'-0" 2'-10" 6" 20'-0" 2"	

MARK	THICKNESS	NORTH WEST SUPPORT / SOUTH EAST SUPPORT	REMARKS
1S-14 1S-14A	8"	10'-9" #5@16" #5@16" * 7'-0" 2'-10" #5@11" 6" 20'-0" 2"	* CHANGE TO #4@16" AND 9'-0" FOR 1S-14A OPP. HAND
1S-15	8"	5'-0" #4@16" 2'-10" #5@16" #5@11" 2" 20'-0" 2"	USE #5@16" o.c. TOP & BOTT IN TRANSVERSE DIRECTION
2S-2	9"	(AA) (EE) 4'-6" 5'-6" 5'-6" 6@12" 6@12" 6@12" 1'-9" 1'-3" 6" 16'-0" 5"	USE #5@12" TOP & BOTT IN TRANSVERSE DIRECTION
2S-1	9"	(W1) (W) 4'-6" 6@12" 5'-6" 5'-6" 6@12" FROM 2S-2 6@12" 1'-9" 5" 16'-0" 6"	SEE 2S-2
2S-3	9"	(W1) 2" 6@12" 4'-6" 6@12" (W) STOP BARS AT STRIP SEE 1/S18 6@12" 5'-6" 7'-8" (EE) 16'-0" 16'-0" 5"	USE #5@12" CC TOP & BOTT IN TRANSVERSE DIRECTION
2S-4	9"	#4@18"	USE #4@18" TOP & BOTT. IN TRANSVERSE DIRECTION DELETED
2S-5	9"	#5@12" (5) 8'-0" MIN. 1'-9" TYP. 2" #6@12" VARIES 6" MIN.	USE #5@12" TOP & BOTT. IN TRANSVERSE DIRECTION
2S-6	9"	(T) #5@12" 1'-9" #7@6" 2" 20'-0" MAX. 2"*	* 1'-4" at tab ¾" clr typ * 2'-2" at ELEVATOR
2S-7	8"	1'-0" 2" #4@9"cc	TRANSVERSE REINF. USE #4@9" CC TOP & BOTT.
2S-8	8"	#4@9"	SEE 2S-7
2S-9	8"	VARIES SEE PLAN. #4@9"cc	
2S 10	8"	PORCH REBARS #4@3" 12'-0" #4@4" CC SEE 1/S18 2'-0" #4@9" CC 2" BALANCE OF BARS SIMILAR TO 2S-8, & 2S-9	TRANSVERSE REINF. TOP - SEE 2S-11 BOTT - #4@9" CC
2S-11	9"	(30) #6@16" (35) #6@8" 2" 20'-0" 2"	TRANSVERSE REINF. #5@8" BOTTOM BARS #5@6" TOP BARS AT WEST SUPPORT AND #5@12" EAST SUPPORT EXTEND TOP BARS 6'-0" MIN INTO SLAB.
2S-12	9"		DELETED
2S-13	6"	(30) #5@9" #5@9" 2" 2"	TRANSVERSE REINF. #5@12" MIN. TOP & BOTT.
2S-14	SLAB THICKNESS VARIES FROM 13" ON LINE (C) & (35) TO 6".	(C) #7@9"cc (F) 8'-2" 3'-0" 3'-6" #7@9" #5@9" 5' 6"	TRANSVERSE REINF. #7@9" CC TOP, #5@9" CC BOTT.
MS-1	6"	#4@4" #4@8" 5" 5"	TRANSVERSE REINF. #4@8" TOP BARS #4@12" BOTTOM BARS

GFDS, ENGINEERS
CIVIL & STRUCTURAL ENGINEERS
1620 MONTGOMERY ST., SAN FRANCISCO, CALIFORNIA
SE1327

BEAM AND SLAB SCHEDULE

DATE: 16 MAR '70
As built

045 (S13) Beam & Slab Schedule 1970-03-16

COLLEGE UNION
HUMBOLDT STATE COLLEGE, ARCATA, CALIFORNIA

TRUMP AND SAUBLE, MARVIN TRUMP, ARCHITECT, A.I.A.
202 M STREET EUREKA, CALIFORNIA 95501 TEL. 707 - 442-1554

S13

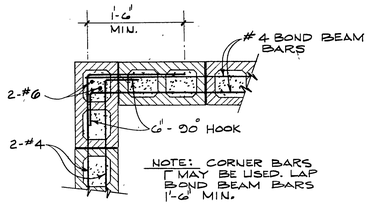

CORNER

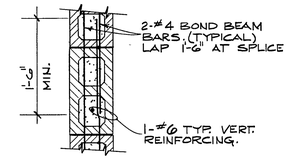

SPLICE

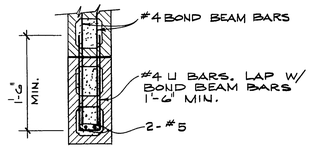

END OF JAMB OR WALL

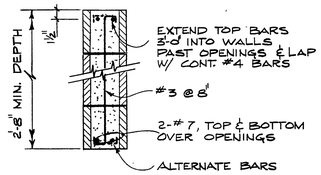

TYPICAL LINTEL BEAM

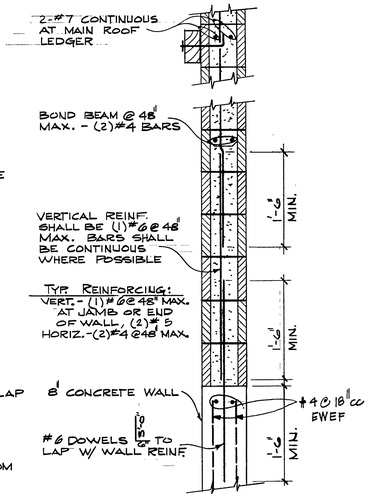

TYPICAL WALL SECTION

NOTE: ALL CELLS IN CONCRETE BLOCK WALLS SHALL BE FILLED SOLID WITH GROUT

TYPICAL CONCRETE BLOCK WALL DETAILS

SCALE: 1" = 1'-0"

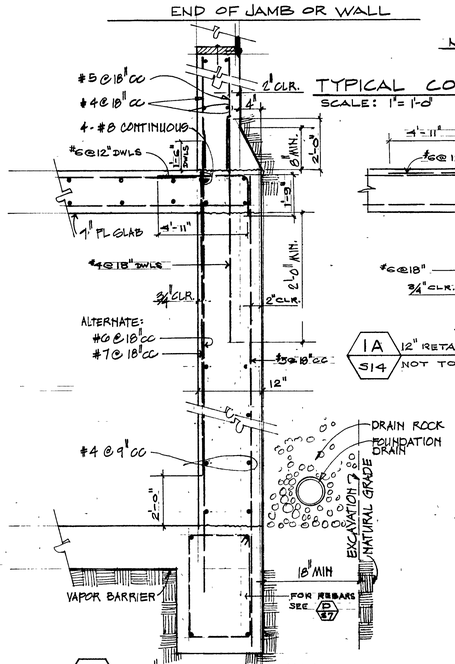

1 / S14 — 12" RETAINING WALL
NOT TO SCALE

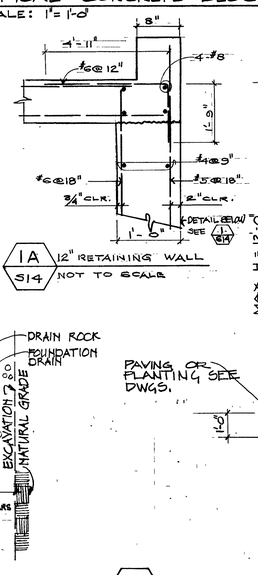

1A / S14 — 12" RETAINING WALL
NOT TO SCALE

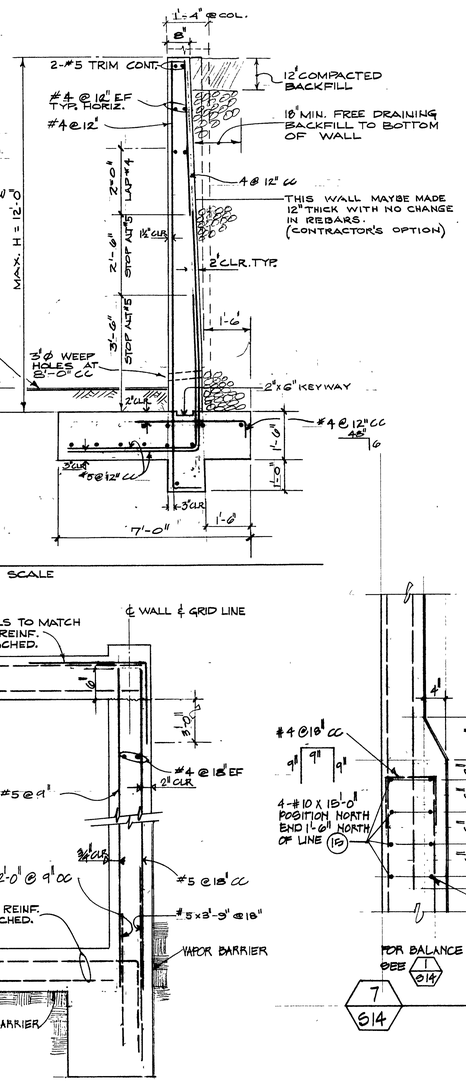

2 / S14 — NOT TO SCALE

RETAINING WALL SCHED.		
HEIGHT	BASE WIDTH	VERT. REINF.
1'-0" TO 3'-0"	2'-0"	#4 @ 18"
3'-0" TO 6'-0"	4'-0"	#4 @ 12"
6'-0" TO 8'-0"	5'-0"	#5 @ 8"

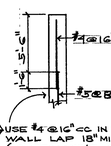

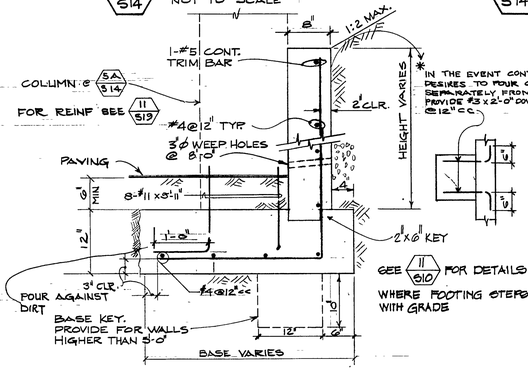

5A / S14 — 5 / S14 — TYPICAL RETAINING WALL DETAIL
NOT TO SCALE

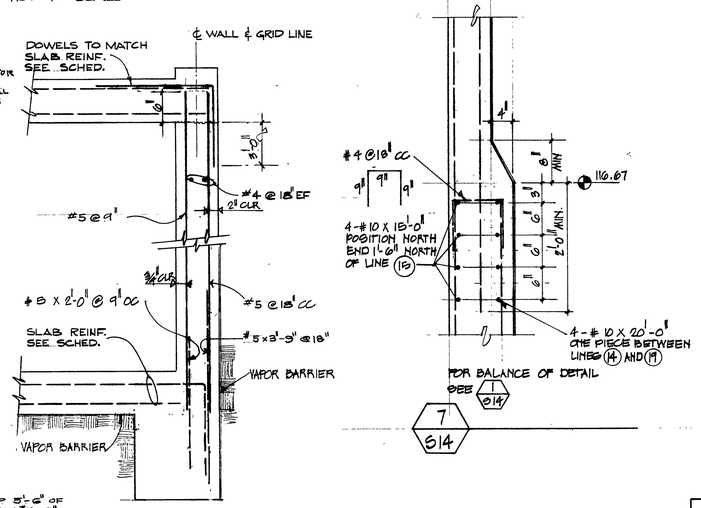

6 / S14 — 8" RETAINING WALL

7 / S14

SHEAR WALL SCHEDULE

SYMBOL	MATERIAL (1)	SHEET EDGE NAILING (6)(2)	INTERMEDIATE NAILING (2)	SILL NAILING (4)	SILL BOLTING (7)	CLIPS (5)	BLK (2) NAILS	LEDGER NAILS (2)
1	⅜" PLY. ONE SIDE	8d @ 6"	8d @ 12"	16d @ 8"	⅝"ø @ 48"		2-16d	10d @ 6"
2	⅜" PLY. ONE SIDE	8d @ 2½"	"	16d @ 3"	⅝"ø @ 24"		4-16d	"
3	⅜" PLY. BOTH SIDES	8d @ 4"	"	2 ROWS, 16d @ 6"	¾"ø @ 28"		5-16d	"
4	⅜" PLY. BOTH SIDES	8d @ 2½"	"	2 ROWS, 16d @ 3"	¾"ø @ 20"		8-16d	"
5		8d @ 2"	SEE	DETAIL (5) S17				

SHEAR WALL SCHEDULE NOTES

1. STANDARD WITH EXTERIOR GLUE.
2. COMMON NAILS ONLY.
3. 11ga., 1¾" LONG, 7/16" HEAD, DIAMOND POINT GALV.
4. UNLESS OTHERWISE SCHEDULED, SILL NAILING 16d @ 16".
5. SIMPSON COMPANY.
6. 2x4 FLAT BLOCKING AT SHEET EDGES. SHEET EDGES MUST NAIL TO SAME PIECE UNLESS SHOWN OTHERWISE.
7. UNLESS SHOWN OTHERWISE, SILL BOLTING SHALL BE ⅝"ø @ 6'-0".
8.

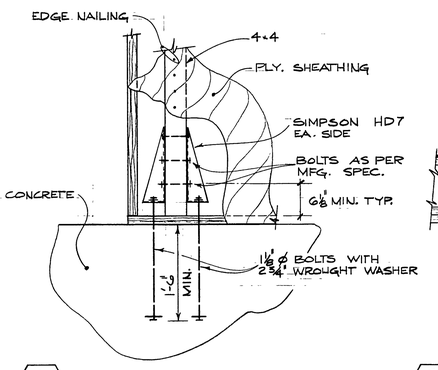

A / S14 — TWO HOLDOWNS
B / S14 — ONE HOLDOWN - SIMILAR

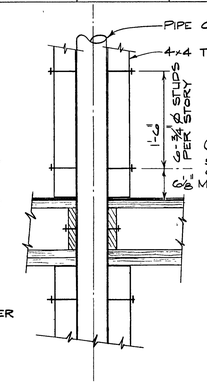

C / S14 — HOLDOWN AT PIPE COLUMN

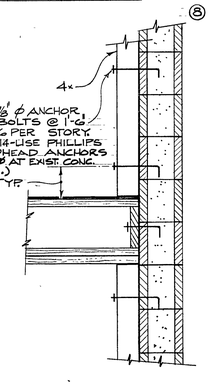

D / S14 — HOLDOWN AT NEW WALL
E / S14 — EDGE DETAIL AT EXIST. CONC. COL.

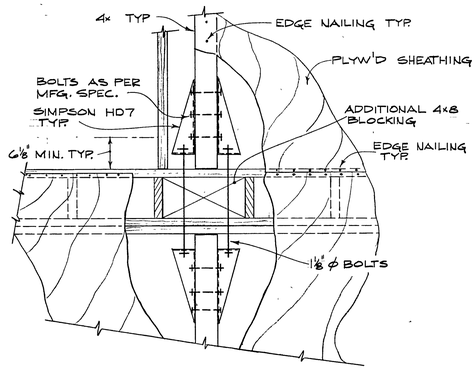

AA / S14 — TWO HOLDOWNS
BB / S14 — ONE HOLDOWN - SIMILAR

TYPICAL SHEAR WALL DETAILS

SCALE: 1" = 1'-0"

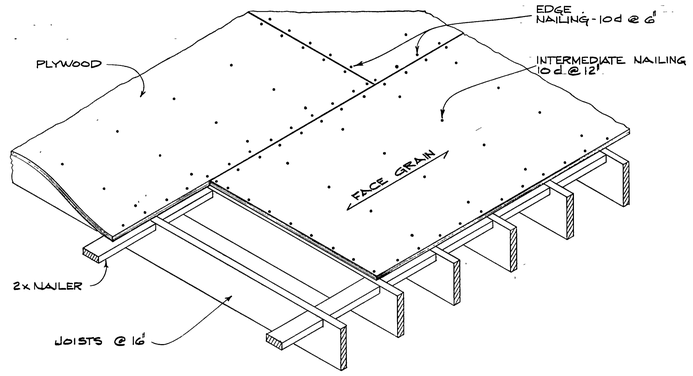

3 / S14 — PLYWOOD NAILING DETAIL - JOISTS @ 16" c.c.
(PLYWOOD FLOOR NAILING DETAIL - TRUSS JOISTS SIM)
NOT TO SCALE

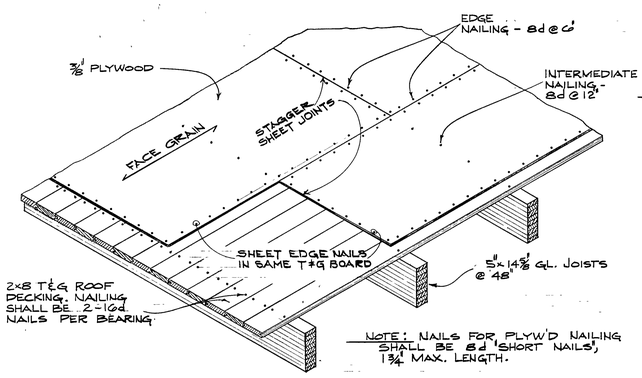

NOTE: NAILS FOR PLYW'D NAILING SHALL BE 8d 'SHORT NAILS', 1¾" MAX. LENGTH.

4 / S14 — PLYWOOD ROOF NAILING DETAIL - 2x8 T&G
NOT TO SCALE

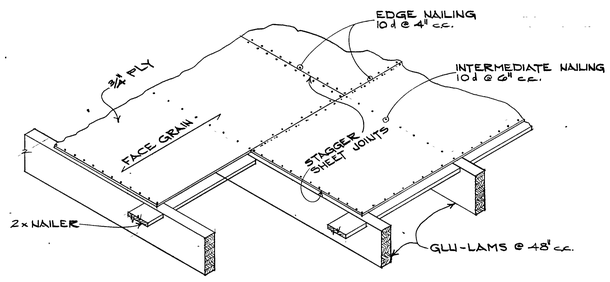

8 / S14 — PLYWOOD ROOF NAILING DETAIL - GLULAM JOIST
NOT TO SCALE

045 (S14) Concrete Block Shear Wall, Roof Nailing, Retaining Wall, Typical Details 1970-03-16

GFDS ENGINEERS
CIVIL & STRUCTURAL ENGINEERS
1620 MONTGOMERY ST., SAN FRANCISCO, CALIFORNIA
Edward Fleischmann SE1327

CONCRETE BLOCK
SHEAR WALL
ROOF NAILING
RETAINING WALL
—TYPICAL DETAILS—

DATE: 16 MAR'70
As built

COLLEGE UNION
HUMBOLDT STATE COLLEGE, ARCATA, CALIFORNIA

TRUMP AND SAUBLE, MARVIN TRUMP, ARCHITECT, A.I.A.
202 M STREET EUREKA, CALIFORNIA 95501 TEL. 707-442-1554

S14

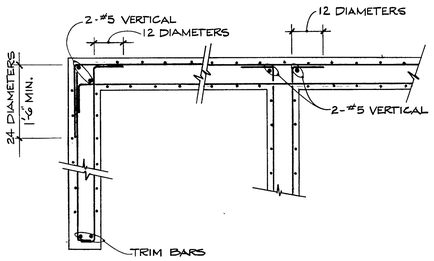

CORNERS AND INTERSECTION
(FOOTINGS SIMILAR)

TYPICAL WALL REINFORCEMENT UNLESS SHOWN OTHERWISE			
THICKNESS*	HORIZONTAL	VERTICAL	TRIM BARS
8"	#4 @ 18" E.F.	#4 @ 18 E.F.	2-#6
12"	#4@ 9 E.F.	SEE DETAILS	2-#6

*THICKNESS IS NOMINAL.

SCHEDULE

1 / S15 WALL REINFORCEMENT
NOT TO SCALE

NOTE: BEFORE PLACING NEXT POUR, ALL SURFACES SHALL BE CLEANED, ROUGHENED, AND CLEARED OF LOOSE MATERIALS. SEE SPECIFICATIONS.

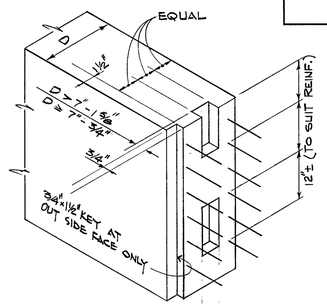

2 / S15 VERTICAL JOINT
NOT TO SCALE

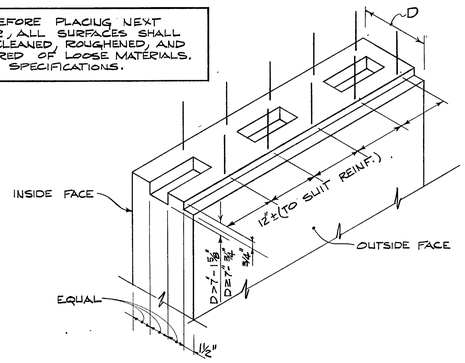

3 / S15 HORIZONTAL JOINT
NOT TO SCALE

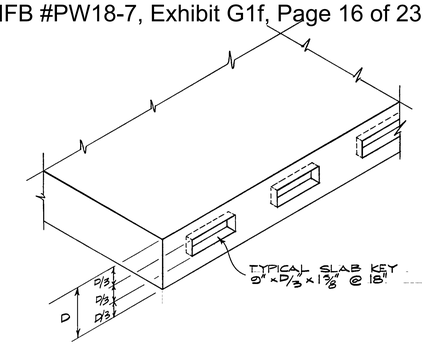

4 / S15 POUR JOINT IN STRUCTURAL SLAB
NOT TO SCALE

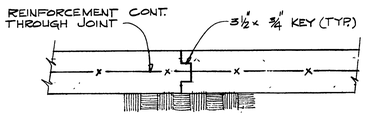

5 / S15 JOINT IN NON-STRUCTURAL SLAB
NOT TO SCALE

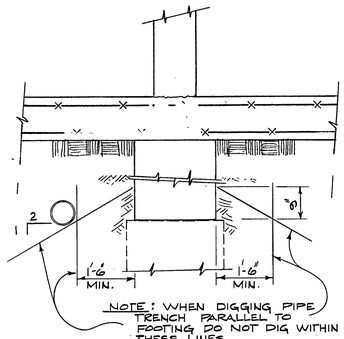

6 / S15 PIPE PARALLEL TO FOOTING
NOT TO SCALE (DETAILS NOT NOTED SAME AS 5/S)

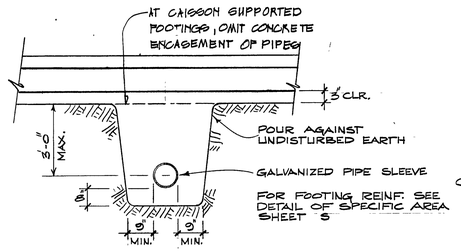

7 / S15 PIPE UNDER FOOTING
NOT TO SCALE

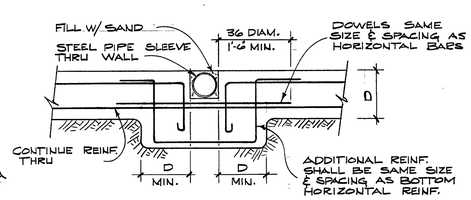

NOT PERMITTED AT CAISSON SUPPORTED FOOTINGS.

8 / S15 PIPE THRU FOOTING
NOT TO SCALE

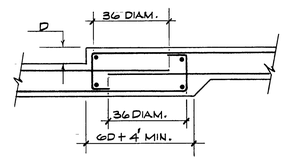

9 / S15 DEPRESSED SLAB DETAIL
NOT TO SCALE

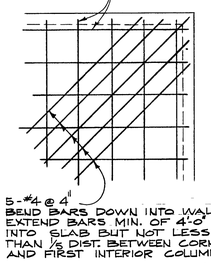

10 / S15 FLOOR SLAB @ EXTERIOR CORNER
NOT TO SCALE

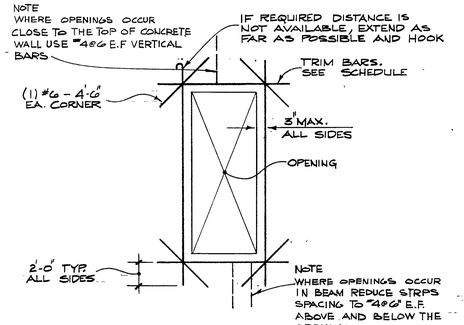

11 / S 15 OPENING IN WALL OR SPANDREL BEAM
NOT TO SCALE

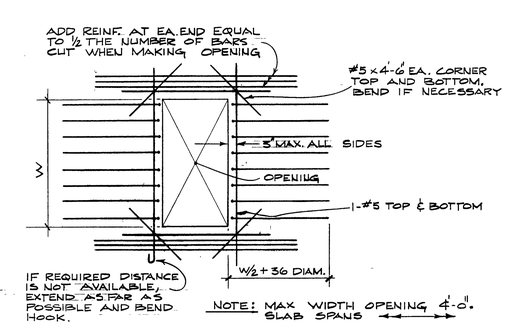

12 / S15 OPENING IN SLAB
NOT TO SCALE

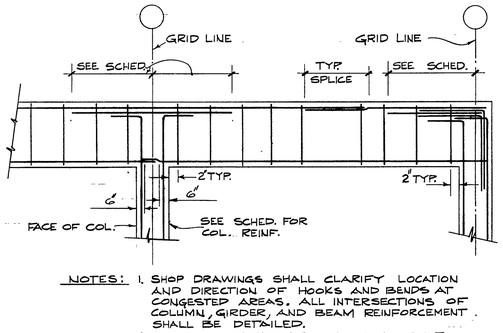

NOTES:
1. SHOP DRAWINGS SHALL CLARIFY LOCATION AND DIRECTION OF HOOKS AND BENDS AT CONGESTED AREAS. ALL INTERSECTIONS OF COLUMN, GIRDER, AND BEAM REINFORCEMENT SHALL BE DETAILED.
2. SEE BEAM SCHEDULE FOR BEAM REINF. AND STIRRUPS.

13 / S15 BEAM ELEVATION
NOT TO SCALE

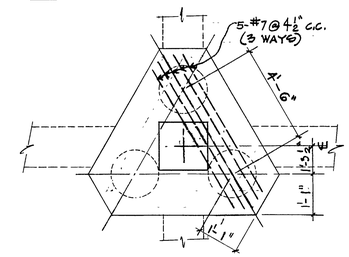

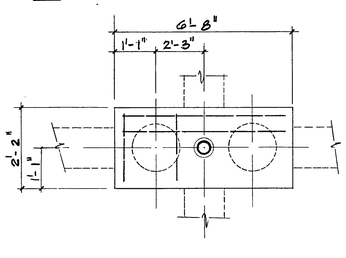

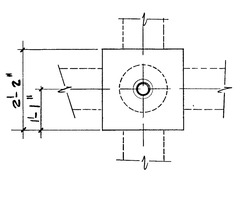

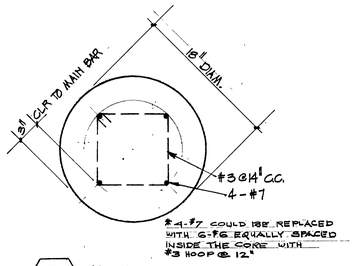

17 / S15 PILE

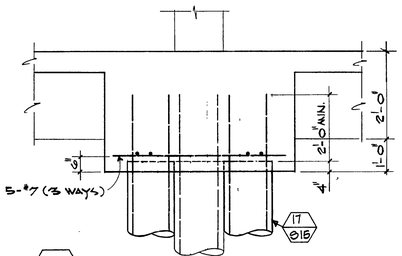

14 / S15 TYPICAL 3 PILE CAP
NOT TO SCALE 1

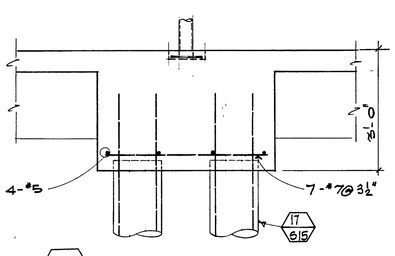

15 / S15 TYPICAL 2 PILE CAP
NOT TO SCALE 1

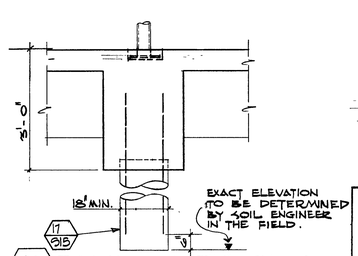

16 / S15 TYPICAL ONE PILE CAP
NOT TO SCALE 1

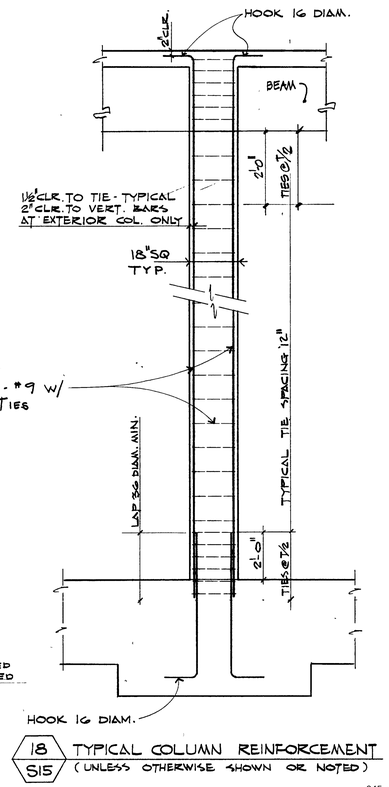

18 / S15 TYPICAL COLUMN REINFORCEMENT
(UNLESS OTHERWISE SHOWN OR NOTED)

GENERAL NOTES

These notes apply to all drawings of this project unless specifically stated otherwise. The Contractor shall compare the Structural Drawings with the Architectural, Mechanical and Electrical Drawings as to layout, details, dimensions and elevations. Discrepancies and conflicts shall be reported to the Architect for adjustment before proceeding with work.

The Contractor shall verify all existing conditions and dimensions at the jobsite. Any existing conditions requiring construction different from that shown shall be reported to the Architect immediately.

Details shown are typical, similar details apply to similar conditions. Any questions of identification of applicable detail or structural member shall be brought to the Architect for resolution before proceeding with work.

Design is in accordance with the 1967 Edition Uniform Building Code. Construction shall conform to applicable sections of this code.

FOUNDATIONS

Foundation piles have been designed in accordance with the recommendations of the "Soil and Foundation Investigations Student Union Building, Humboldt State College, Arcata, California," dated August 22, 1967 and July 25, 1969, prepared by Harding-Miller-Lawson and Associates.

CONCRETE & REINFORCING

Concrete shall attain a minimum ultimate compressive strength at 28 days of 3000 psi. All reinforcing bars shall have a minimum yield strength of 40,000 psi. Reinforced concrete shall conform with Section 26, 1967 U.B.C. Concrete.

STRUCTURAL STEEL

Structural steel shall conform with ASTM A-36 unless otherwise noted. Details in workmanship shall conform with the latest AISC Standards and Code. All welding shall be in accordance with the latest AWS Standard. Steel to be encased in concrete shall be left unpainted, and thoroughly cleaned of all grease, oil, rust and scale just prior to placing of concrete. Fabricator shall submit steel details and required calculations to Architect for approval before commencing fabrications.

MASONRY CONSTRUCTION

Concrete block masonry shall conform with Section 24, 1967 Edition U.B.C. Reinforced Grouted Masonry.

WOOD CONSTRUCTION

All lumber shall be stamped as specified so as to be readily identifiable. Lumber shall be:

Glue-Laminated Wood Members:	See Specifications
Sills and Sole Plates:	Foundation Grade Redwood or Pressure Treated Dense Construction Douglas Fir
Exposed Beams & Posts 4x or larger:	Select Structural Douglas Fir
All other framing lumber:	Construction Grade Douglas Fir
2" T & G decking: exposed	Douglas Fir Select Dex
concealed	Douglas Fir Select Dex or Commercial Dex
Plywood Sheathing:	Structural II DFPA
Underlayment:	Underlayment Grout I, D.F.P.A.

All nails shall be common wire nails, except that plywood diaphragms shall be nailed to 2" decking with Berkeley Plywood Nails. Nailing shall conform with the minimum of that called for in Table 25-N of the 1967 Edition U.B.C. or as called for on the drawings.

SHOP DRAWINGS

All construction shall conform with the Contract Drawings and Specifications. Shop Drawings are clarification drawings for different trades and shall be submitted and approved by the Architect prior to fabrications.

045 (S15) Typical Details 1971-06-07

GFDS ENGINEERS
CIVIL & STRUCTURAL ENGINEERS
1620 MONTGOMERY ST. SAN FRANCISCO, CALIFORNIA
Edward Sherman SE1327

TYPICAL DETAILS

DATE: 16 MAR '70
1 7 JUNE '71
As built

COLLEGE UNION
HUMBOLDT STATE COLLEGE, ARCATA, CALIFORNIA

TRUMP AND SAUBLE, MARVIN TRUMP, ARCHITECT, A.I.A.
202 M STREET EUREKA, CALIFORNIA 95501 TEL. 707 - 442-1554

S15

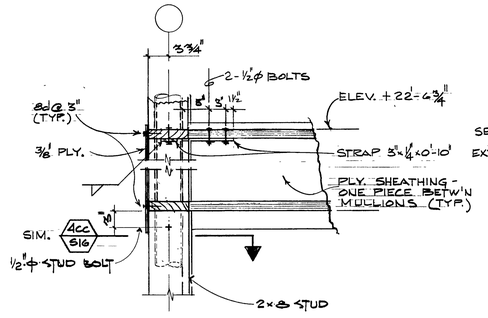

1 S16

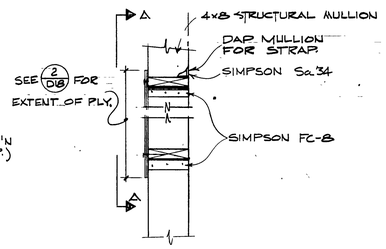

2 S16

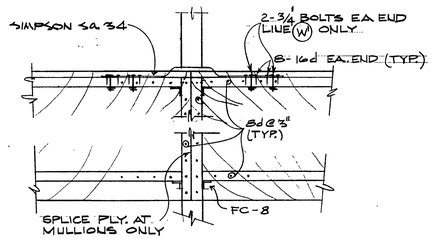

SECTION A-A

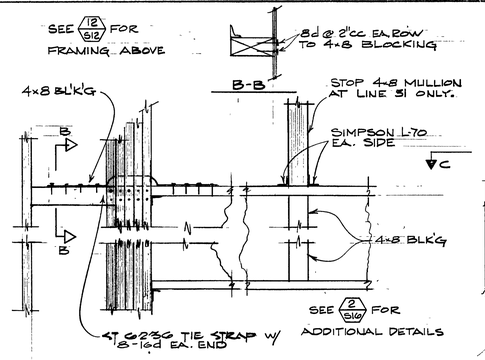

3 S16

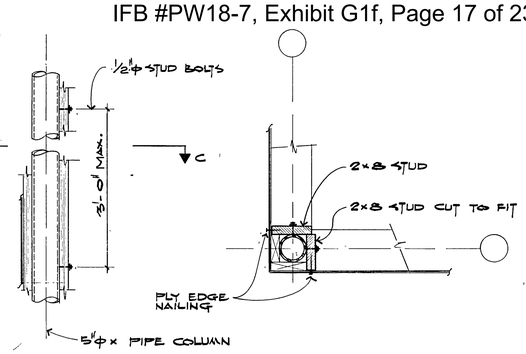

SECTION C-C

4 S16

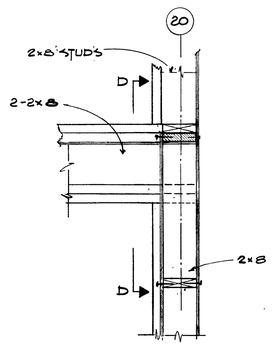

5 S16

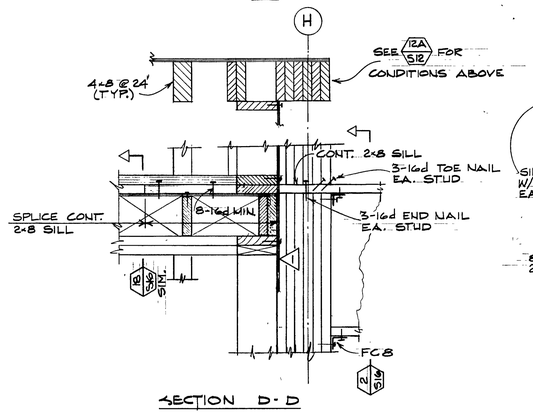

SECTION D-D

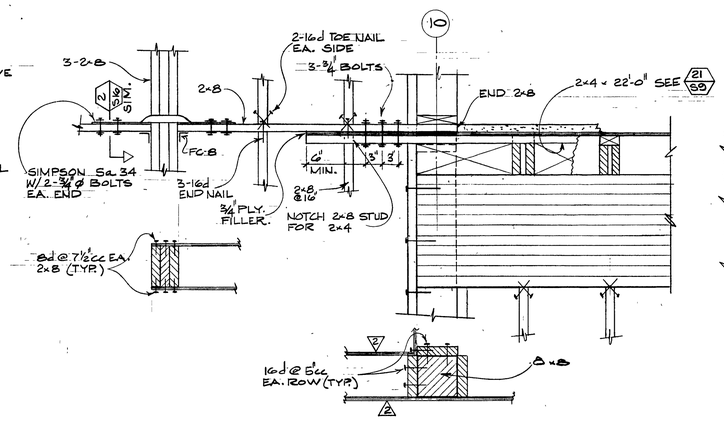

6 S16

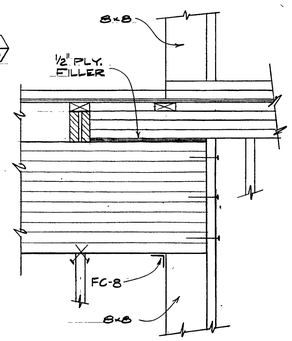

7 S16

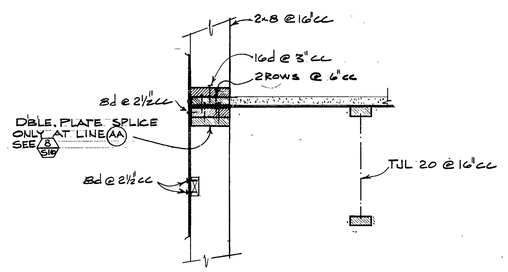

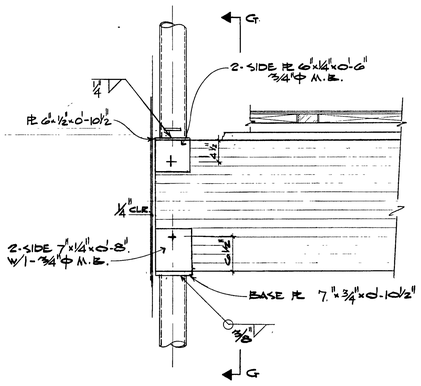

8 S16

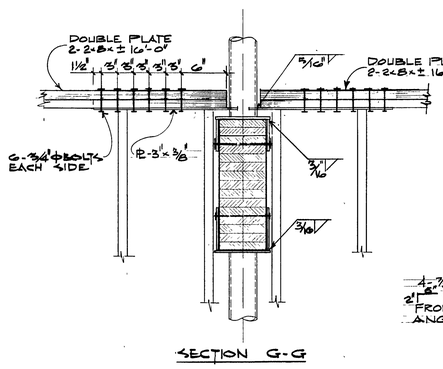

SECTION G-G

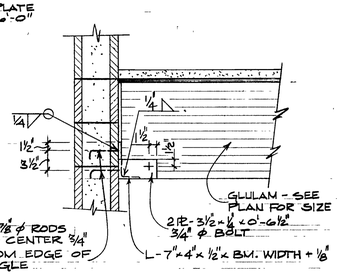

9 S16

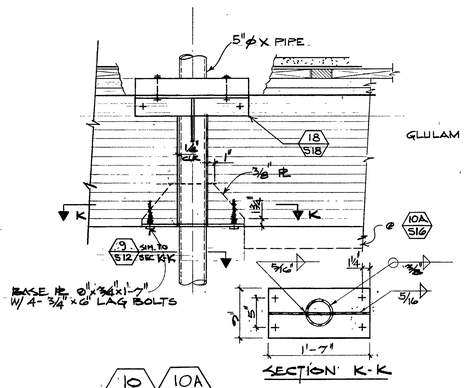

SECTION K-K

10 S16 10A S16

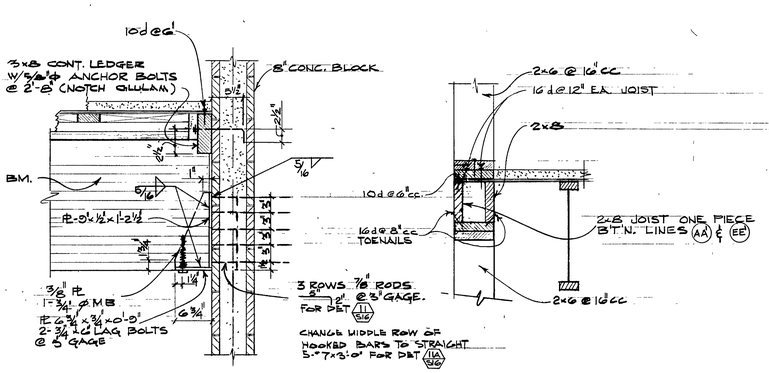

11 S16 11A S16 DETAILS NOT NOTED SAME AS 10/S16

12 S16

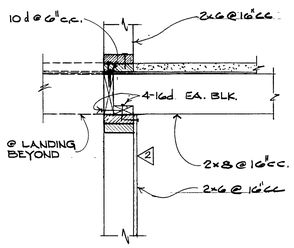

13 S16

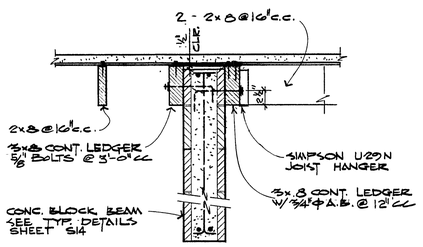

14 S16

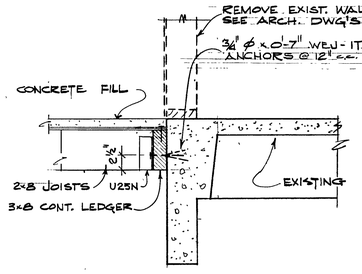

15 S16

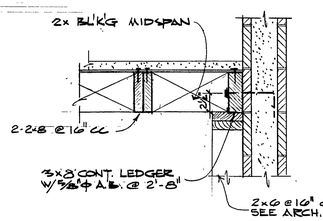

16 S16

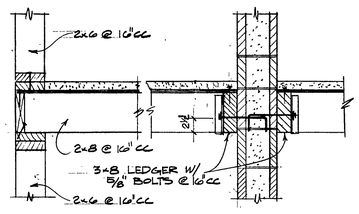

17 S16

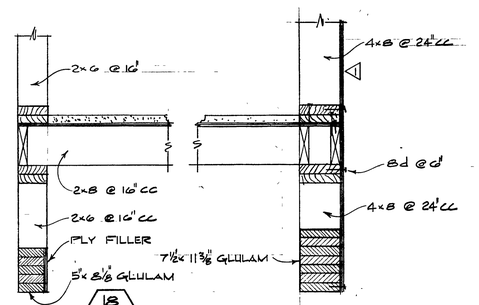

18 S16 945 (S16) Mezzanine Floor Details 1970-03-16

GFDS ENGINEERS
CIVIL & STRUCTURAL ENGINEERS
1620 MONTGOMERY ST., SAN FRANCISCO, CALIFORNIA
SE1327

MEZZANINE FLOOR DETAILS

DATE: 16 MAR '70
As built

COLLEGE UNION
HUMBOLDT STATE COLLEGE, ARCATA, CALIFORNIA
TRUMP AND SAUBLE, MARVIN TRUMP, ARCHITECT, A.I.A.
202 M STREET EUREKA, CALIFORNIA 95501 TEL. 707-442-1554

S16

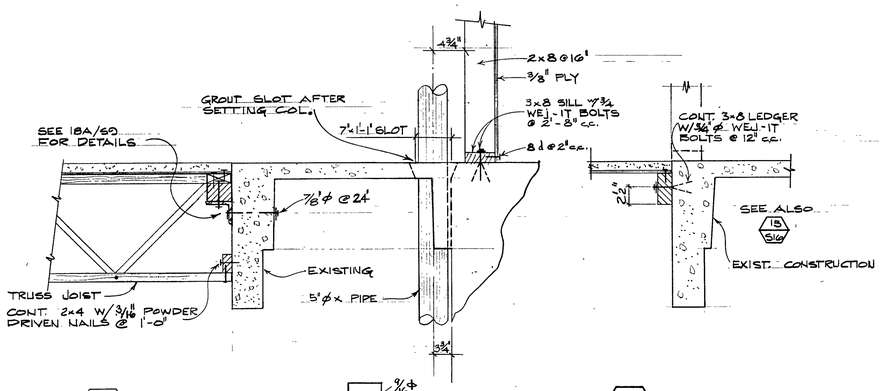

1 / S17

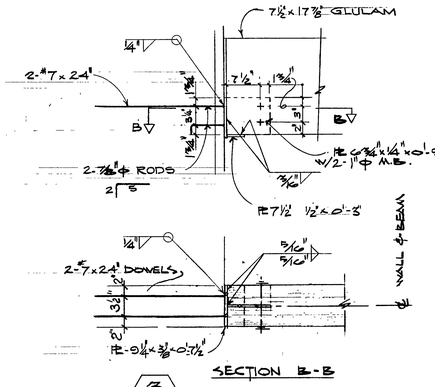

3 / S17

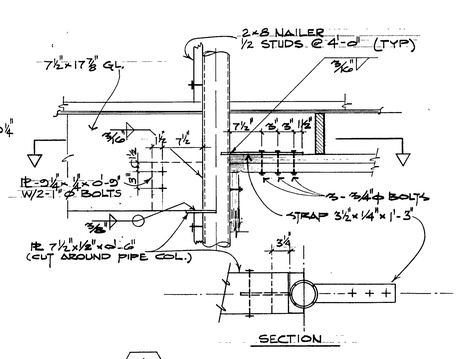

4 / S17

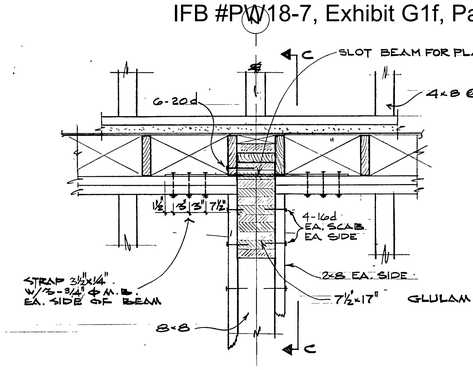

5 / S17

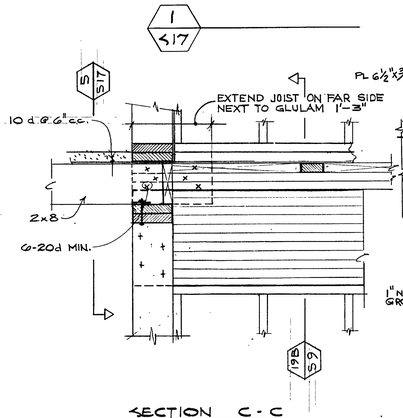

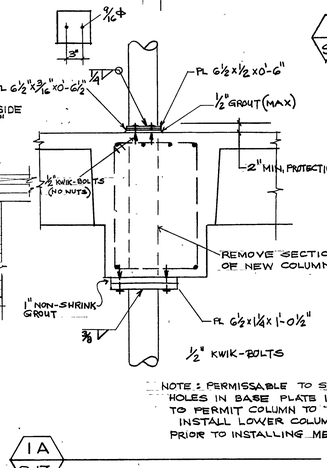

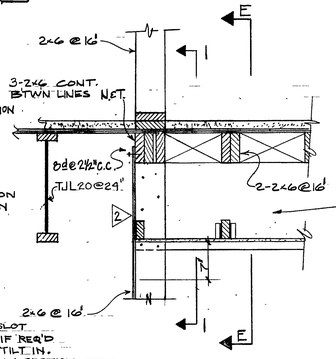

6 / S17

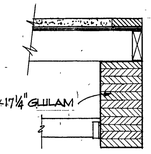

SECTION E-E

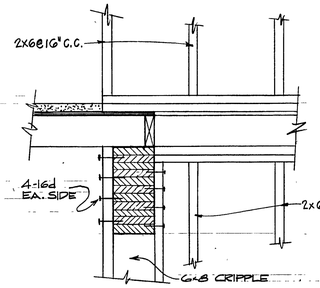

SECTION 1-1

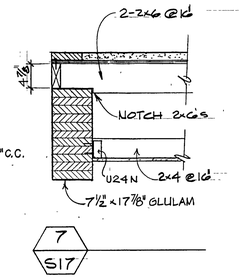

7 / S17

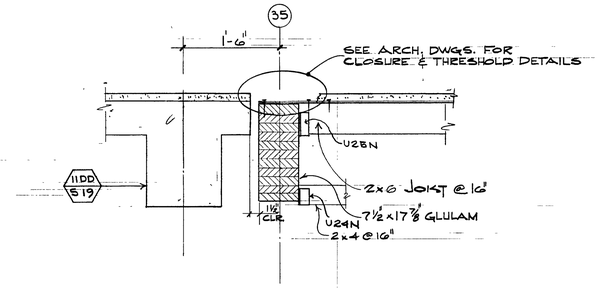

8 / S17

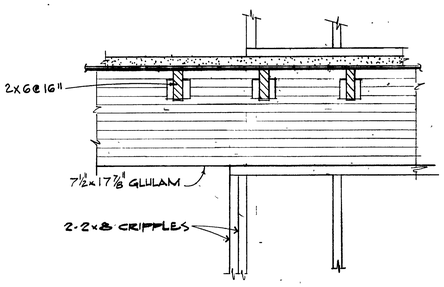

9 / S17

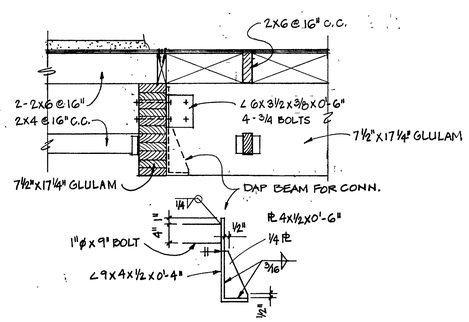

10 / S17

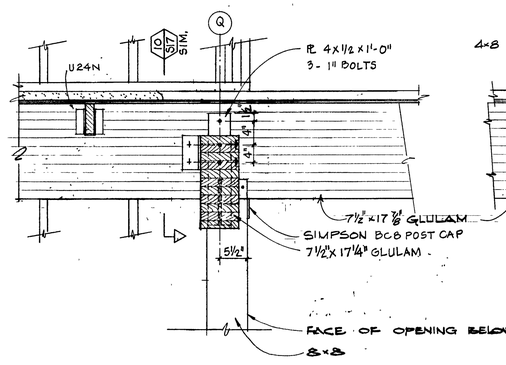

11 / S17

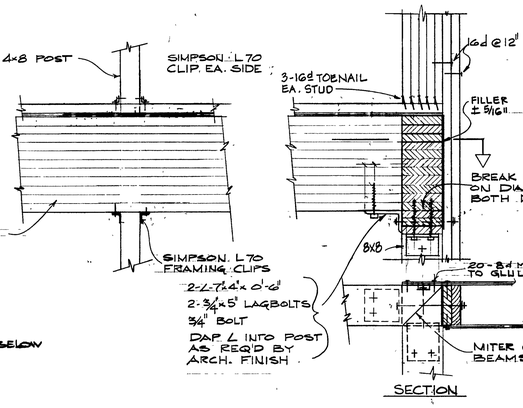

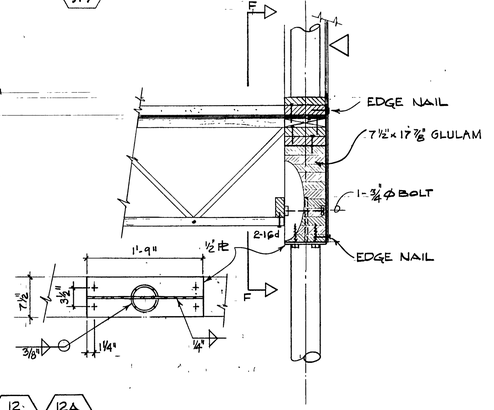

12 / S17 — 12A / S17

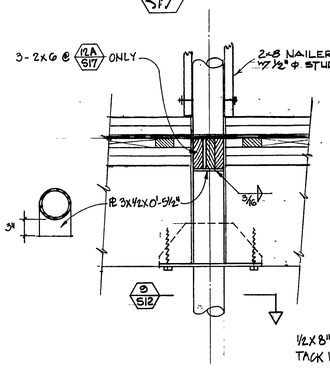

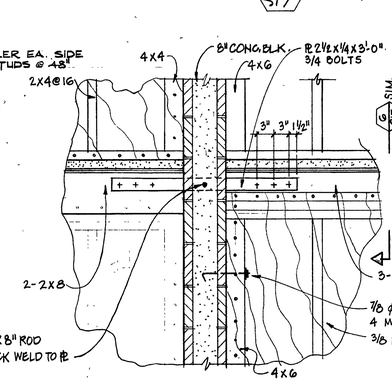

13 / S17

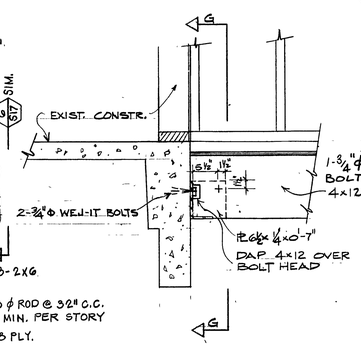

14 / S17

SECTION G-G

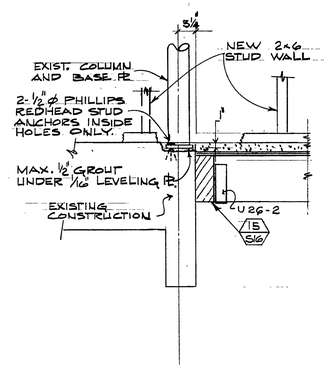

15 / S17

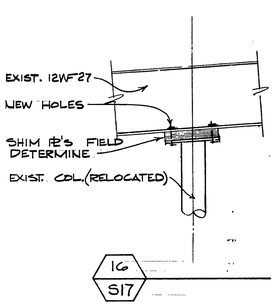

16 / S17

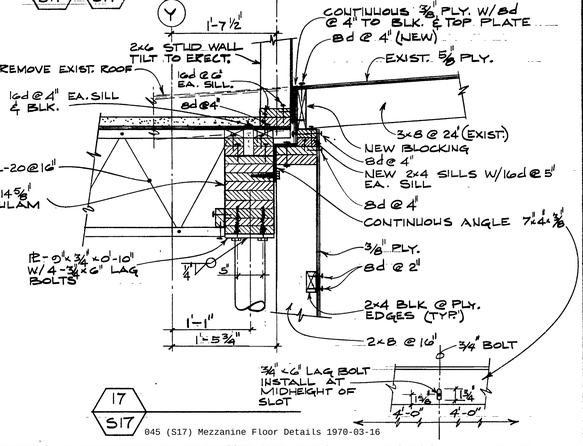

17 / S17

045 (S17) Mezzanine Floor Details 1970-03-16

GFDS ENGINEERS
CIVIL & STRUCTURAL ENGINEERS
1620 MONTGOMERY ST., SAN FRANCISCO, CALIFORNIA
SE1327

MEZZANINE FLOOR DETAILS

DATE: 16 MAR '70
As built

COLLEGE UNION
HUMBOLDT STATE COLLEGE, ARCATA, CALIFORNIA
TRUMP AND SAUBLE, MARVIN TRUMP, ARCHITECT, A.I.A.
202 M STREET EUREKA, CALIFORNIA 95501 TEL. 707-442-1554

S17

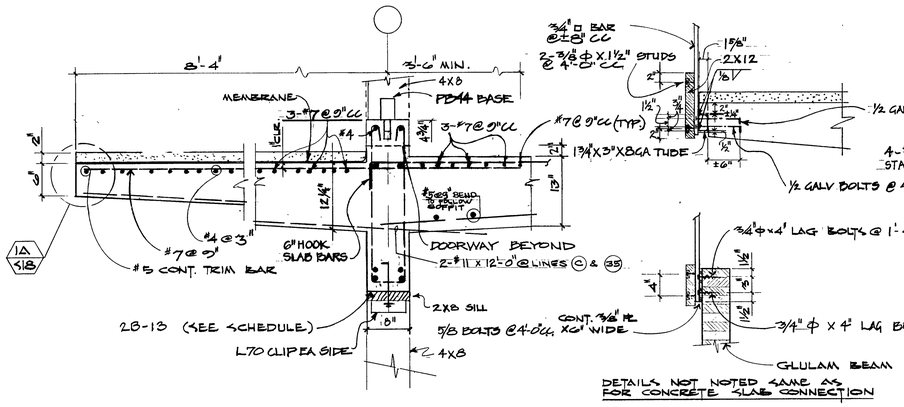

1 S18

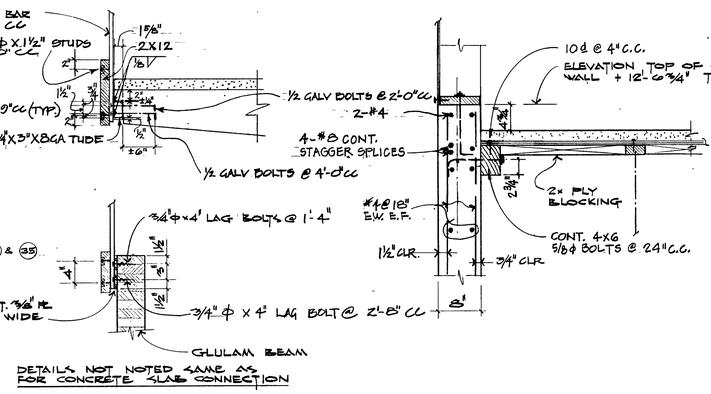

1A S18

2 S18

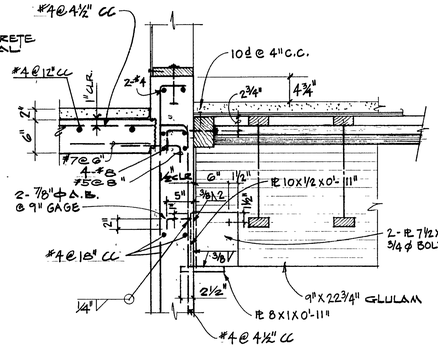

3 S18

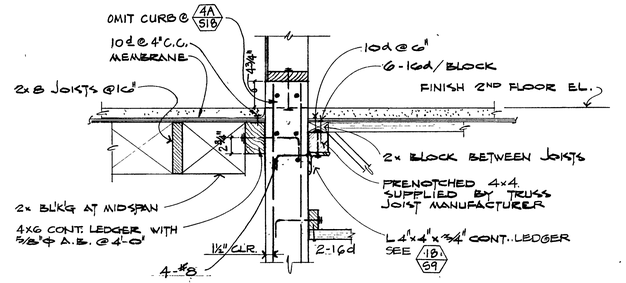

4 S18

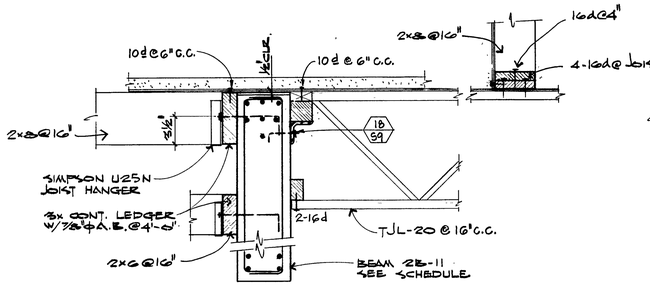

5 S18

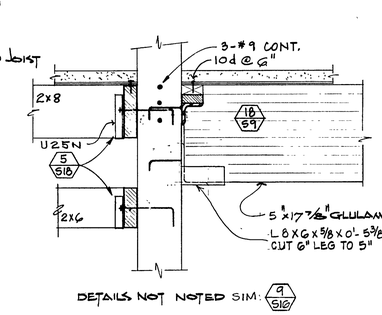

6 S18

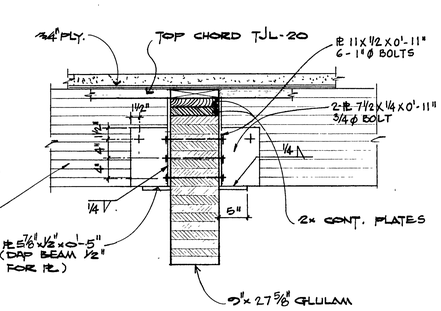

7 S18

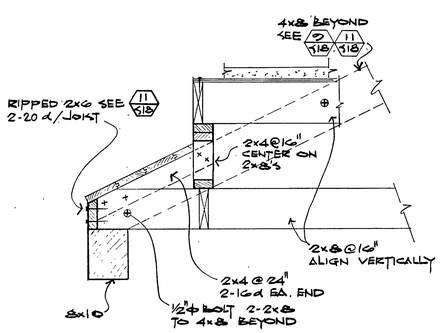

8 S18

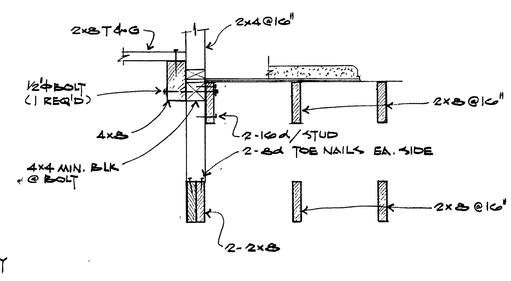

9 S18

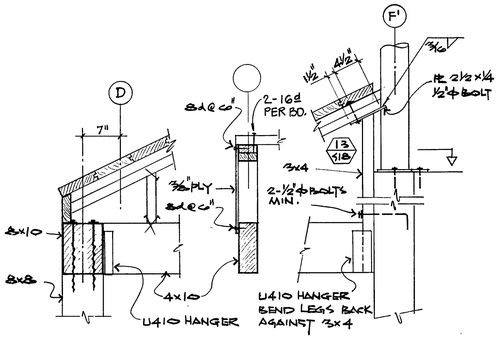

9A S18

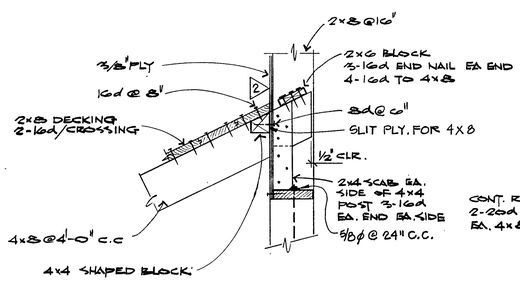

10 S18

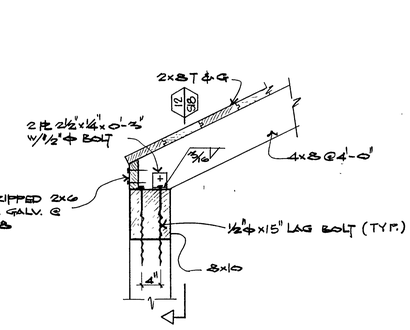

11 S18

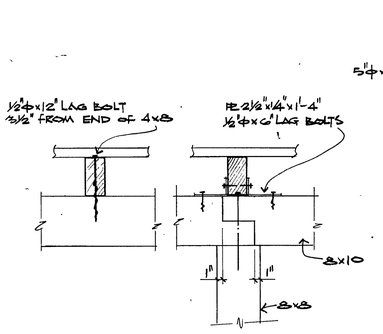

12 S18

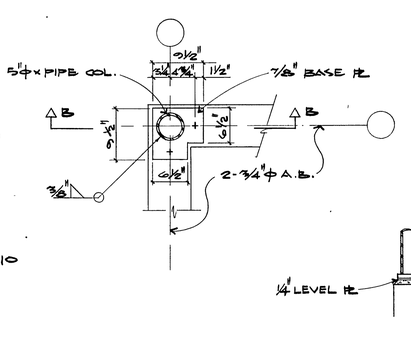

SECTION B-B

13 S18

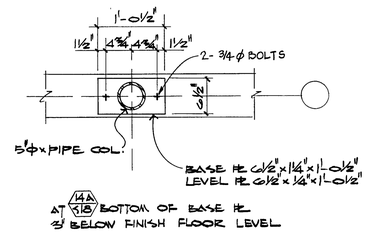

AT 14A S18 BOTTOM OF BASE PL 3' BELOW FINISH FLOOR LEVEL

14 S18

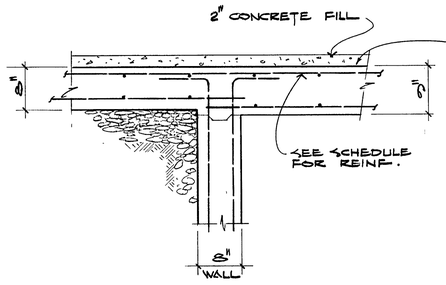

15 S18

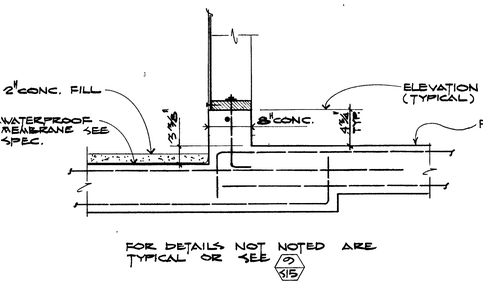

16 S18

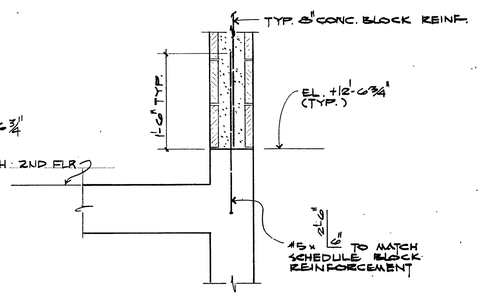

17 S18

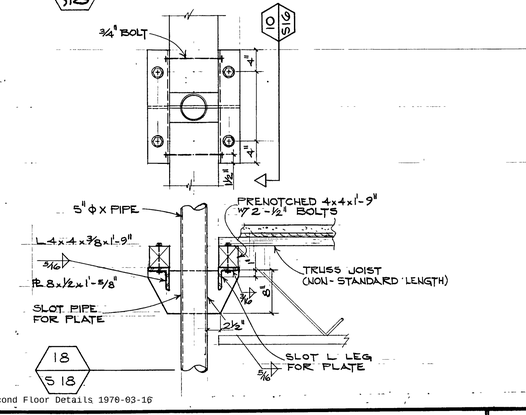

18 S18

. 045 (S18) Second Floor Details 1978-03-16

GFDS ENGINEERS
CIVIL & STRUCTURAL ENGINEERS
1620 MONTGOMERY ST., SAN FRANCISCO, CALIFORNIA
SE1327

SECOND FLOOR
DETAILS

DATE: 16 MAR '70
As built

COLLEGE UNION
HUMBOLDT STATE COLLEGE, ARCATA, CALIFORNIA
TRUMP AND SAUBLE, MARVIN TRUMP, ARCHITECT, A.I.A.
202 M STREET EUREKA, CALIFORNIA 95501 TEL.: 707 - 442-1554

S18

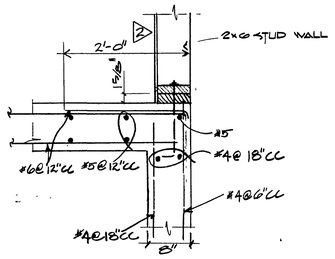

1 / S19

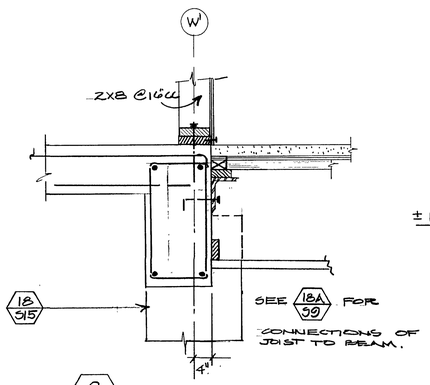

2 / S19

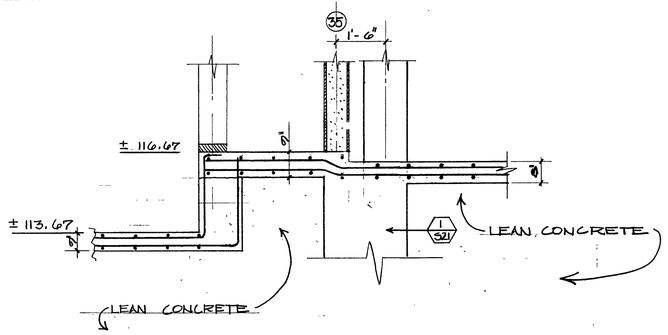

3 / S19 ½" = 1'-0"

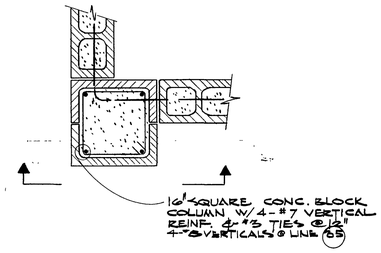

4 / S19

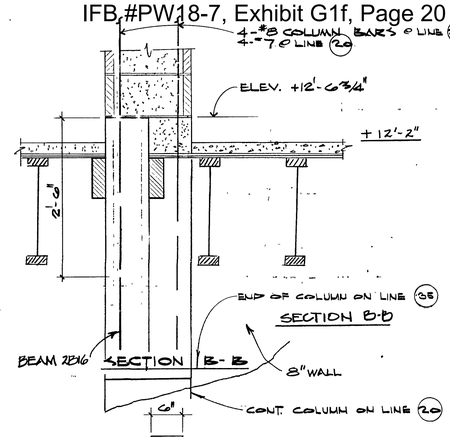

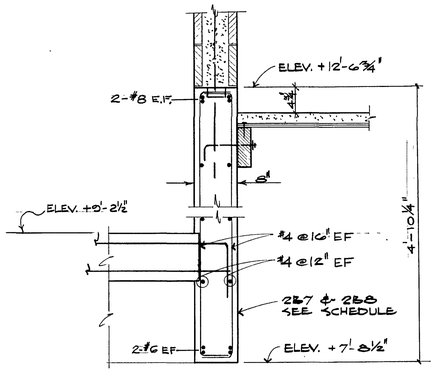

5 / S19

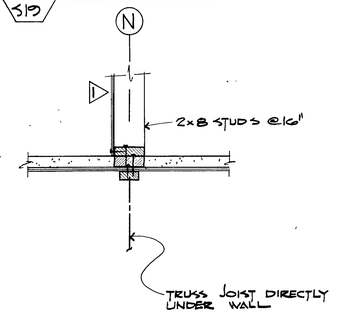

6 / S19

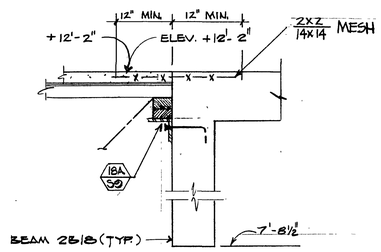

7 / S19

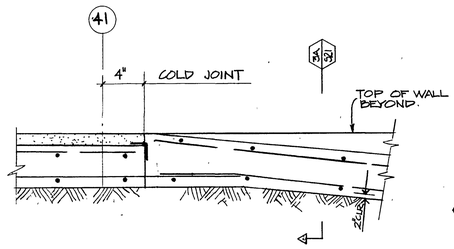

8 / S19

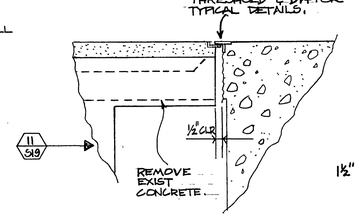

9 / S19

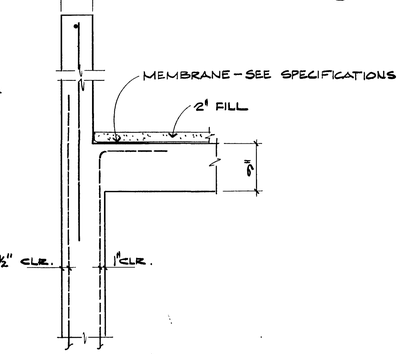

10 / S19

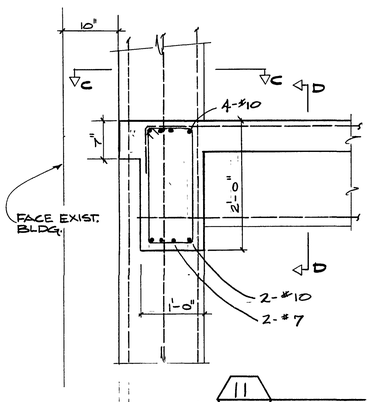

11 / S19

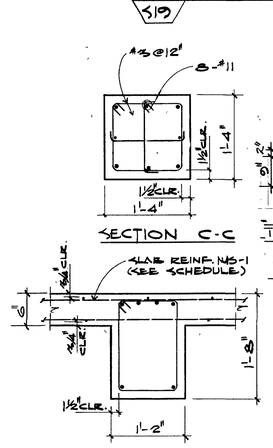

12 / S19 SCALE: ¾" = 1'-0"

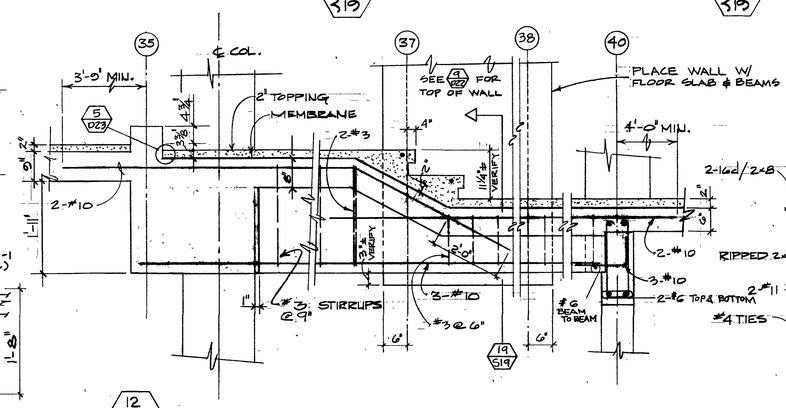

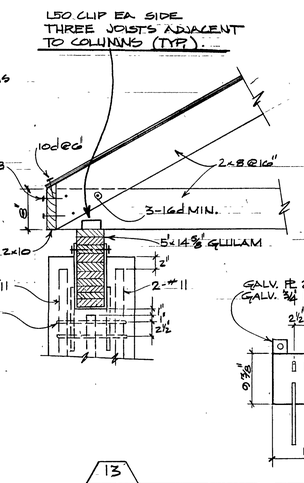

13 / S19

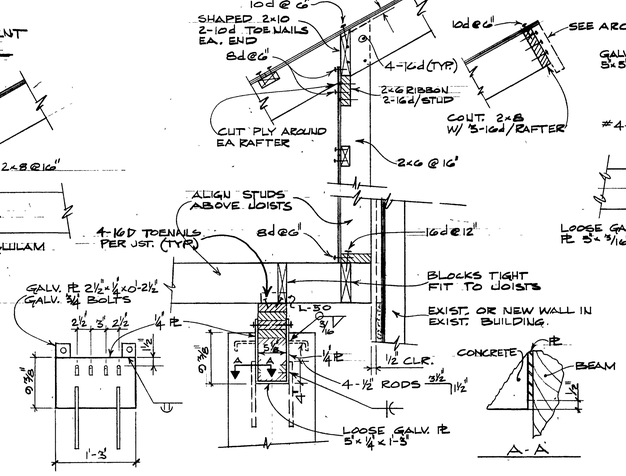

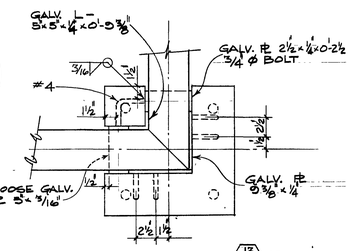

14 / S10

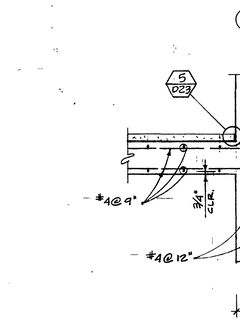

20 / S19 3/4" = 1'-0"

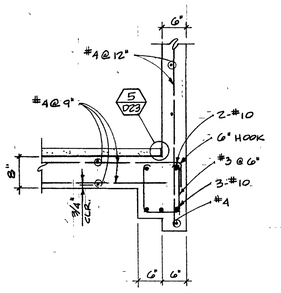

19 / S19 3/4" = 1'-0"

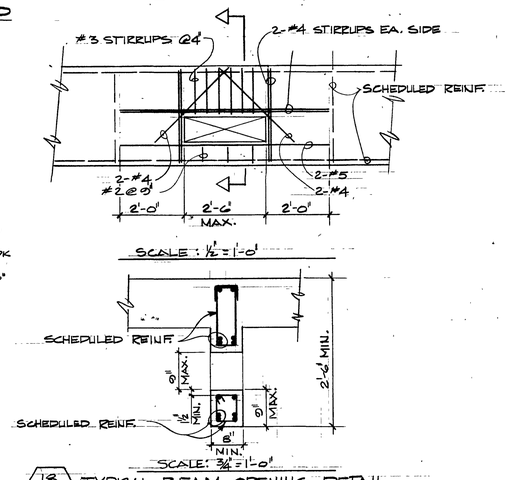

18. TYPICAL BEAM OPENING DETAIL
SCALE AS NOTED
SCALE: ¾" = 1'-0"

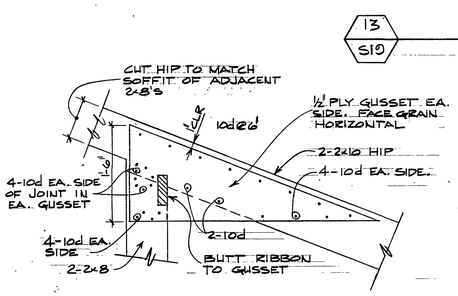

15 / S19

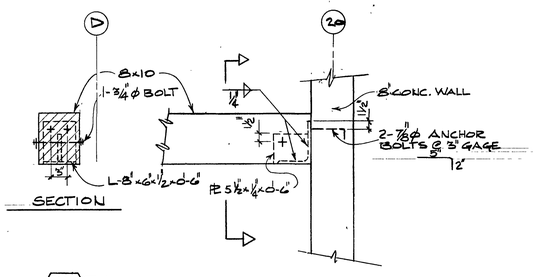

16 / S19

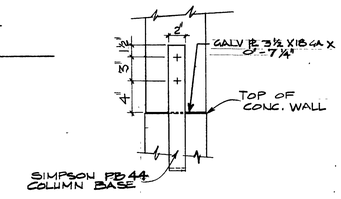

17 / S19 4x8 STRUCTURAL MULLION BASE

045 (S19) Second Floor & Typical Arcade Details 1970-03-16

GFDS ENGINEERS
CIVIL & STRUCTURAL ENGINEERS
1620 MONTGOMERY ST., SAN FRANCISCO, CALIFORNIA
Edward Sedman SE1327

SECOND FLOOR AND TYPICAL ARCADE DETAILS

DATE: 16 MAR'70
As built

COLLEGE UNION
HUMBOLDT STATE COLLEGE, ARCATA, CALIFORNIA
TRUMP AND SAUBLE, MARVIN TRUMP, ARCHITECT, A.I.A.
202 M STREET EUREKA, CALIFORNIA 95501 TEL. 707 - 442-1554

S19

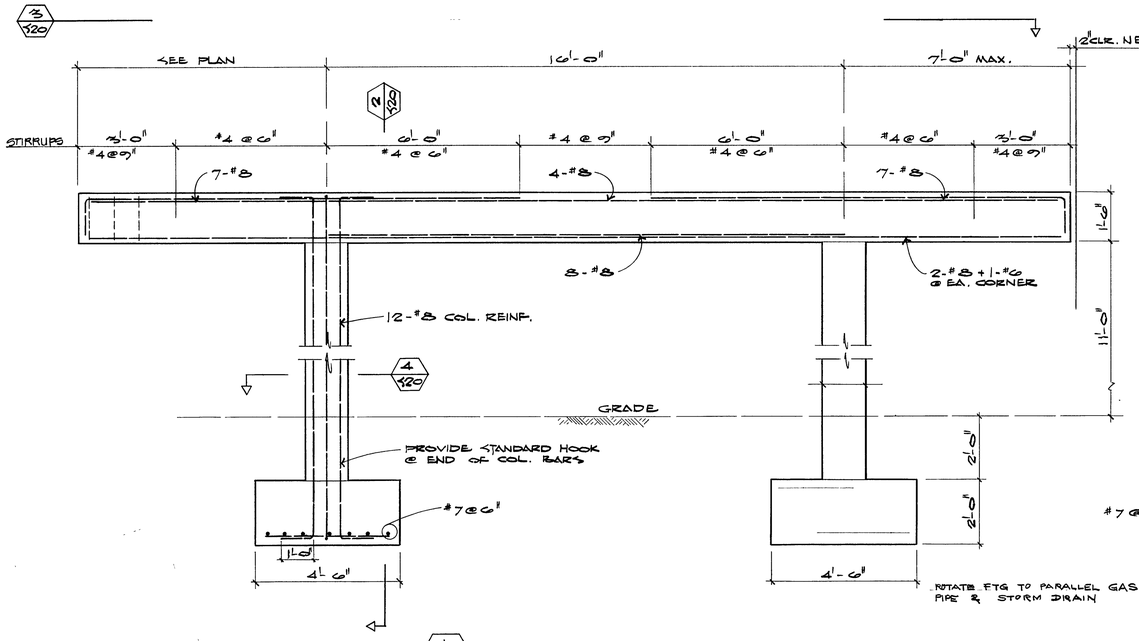

1 S20

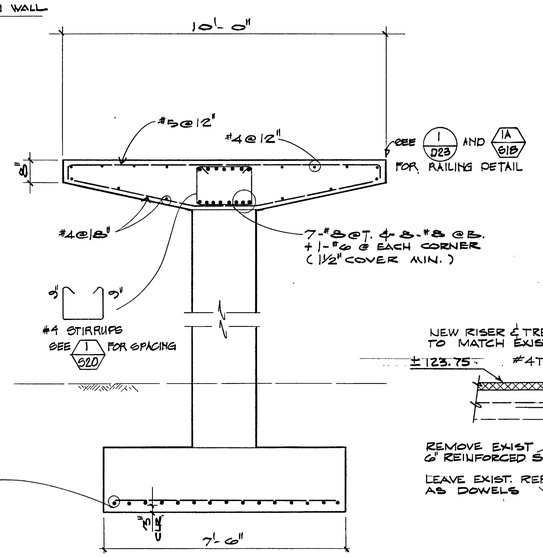

2 S20

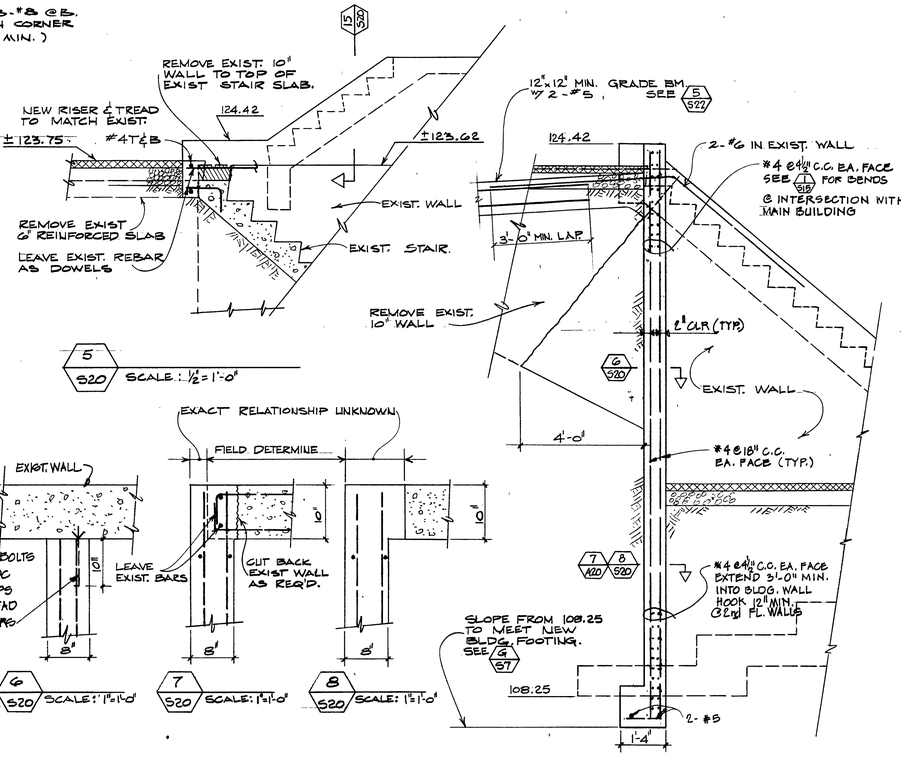

5 S20 SCALE: ½"=1'-0"

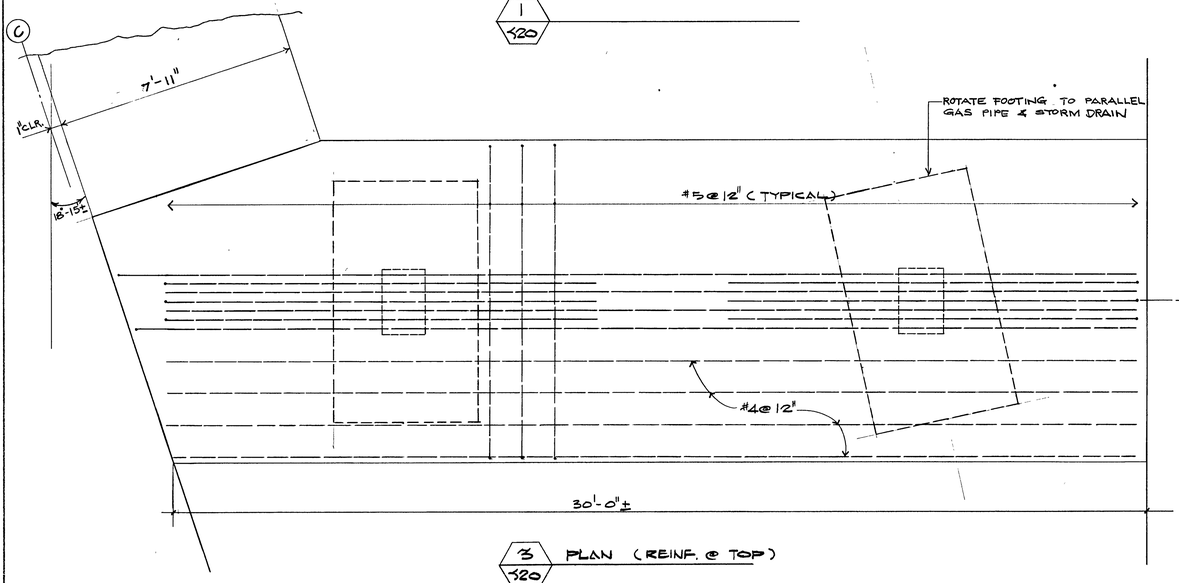

3 S20 PLAN (REINF. @ TOP)

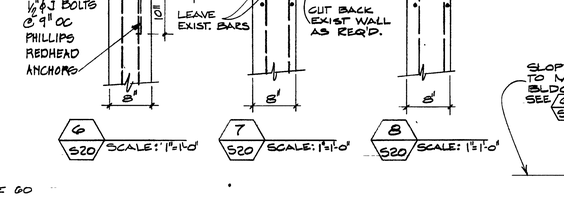

4 S20

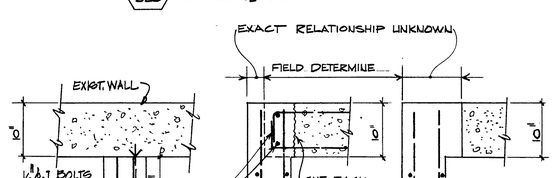

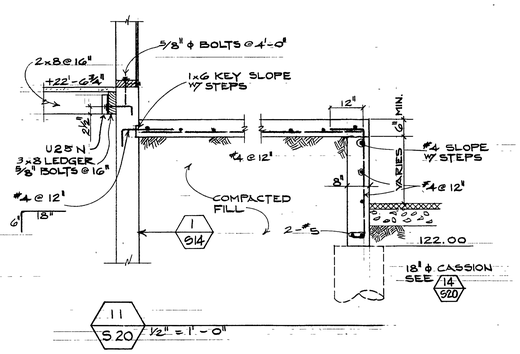

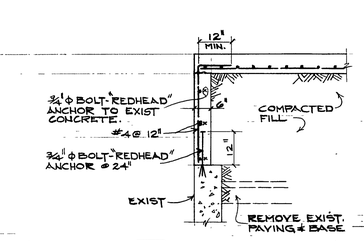

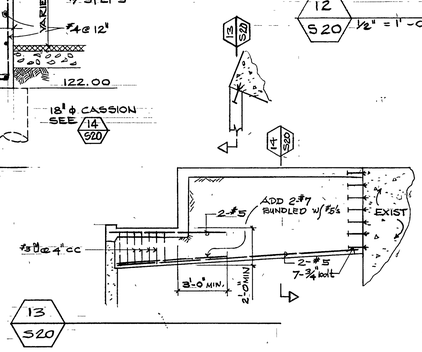

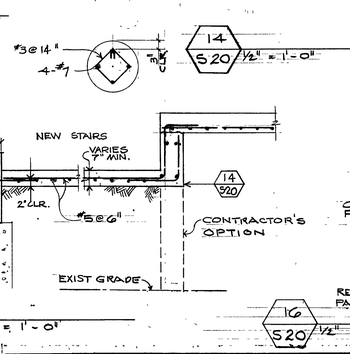

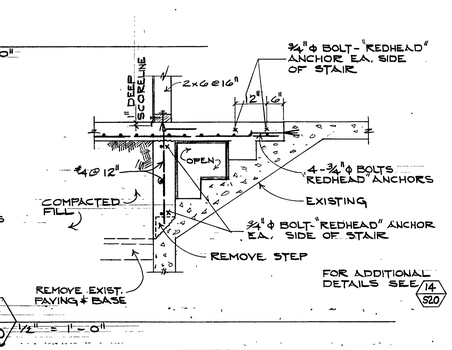

9 S20 SCALE: ½"=1'-0"

GFDS ENGINEERS CIVIL & STRUCTURAL ENGINEERS 1620 MONTGOMERY ST., SAN FRANCISCO, CALIFORNIA Edward Sakamoto SE1327	CONCRETE FOOTBRIDGE PLAN & DETAILS MISCELLANEOUS DETAILS	DATE: 16MAR70 As built	045 (S20) Concrete Footbridge Plan & Details 1970-03-16 COLLEGE UNION HUMBOLDT STATE COLLEGE, ARCATA, CALIFORNIA TRUMP AND SAUBLE, MARVIN TRUMP, ARCHITECT, A.I.A. 202 M STREET EUREKA, CALIFORNIA 95501 TEL. 707-442-1554	S 20

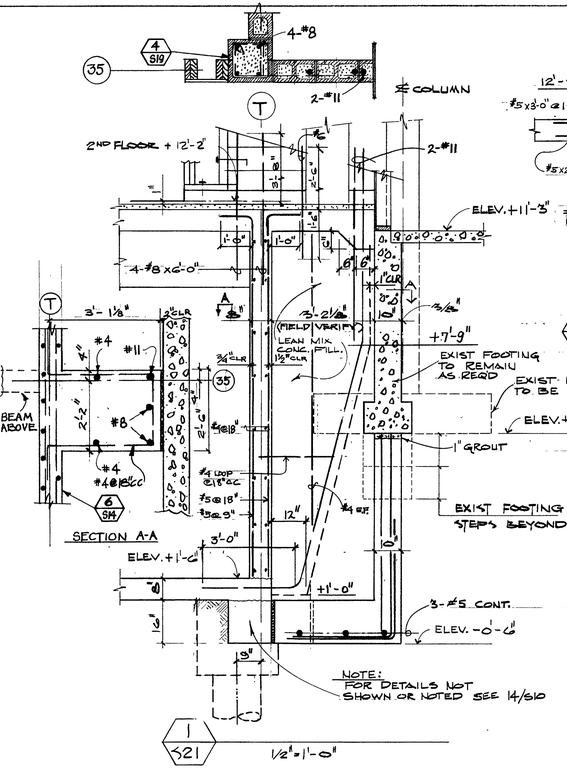

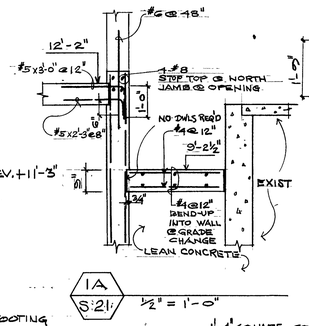

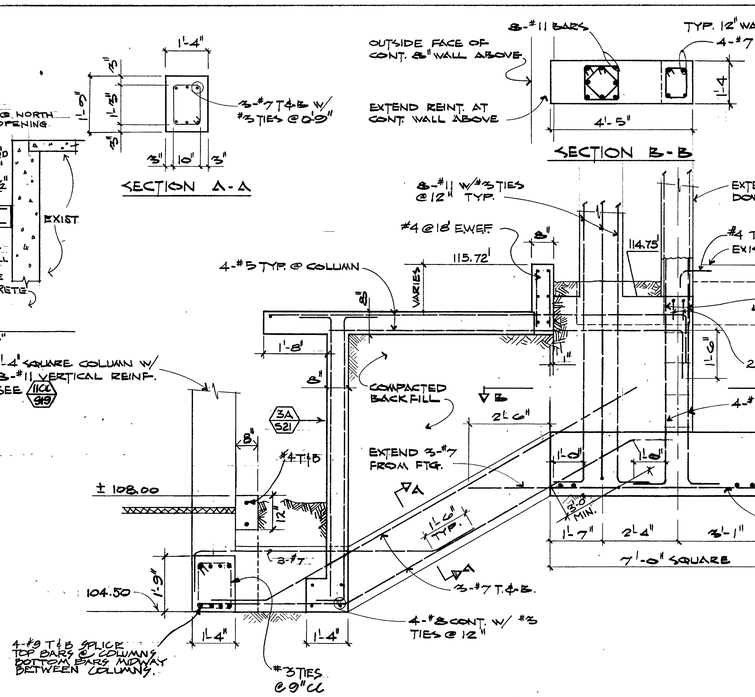

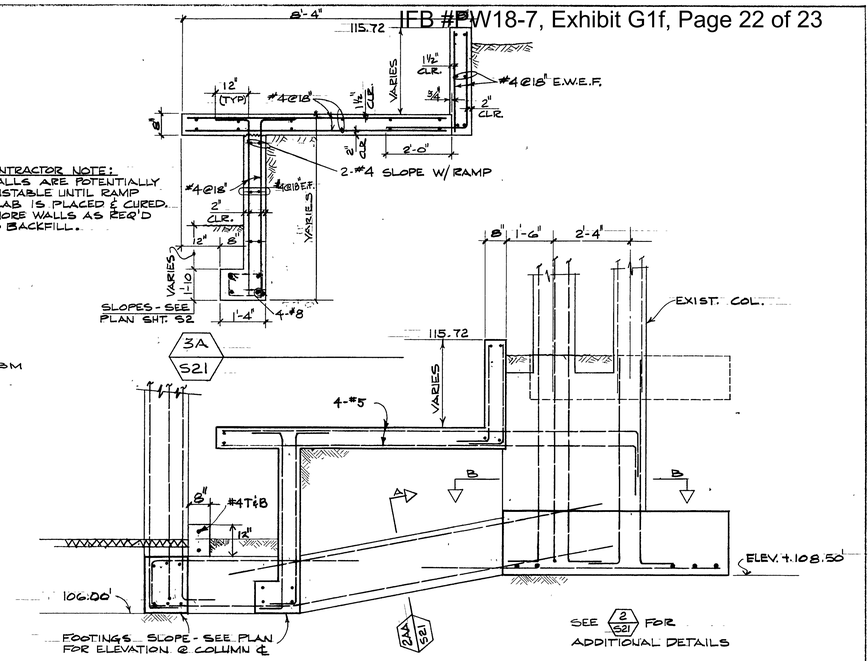

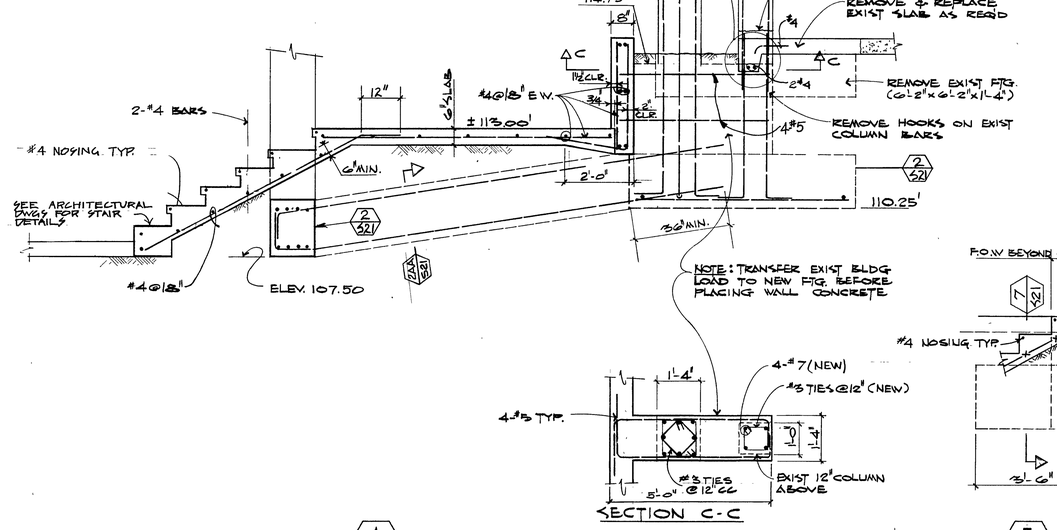

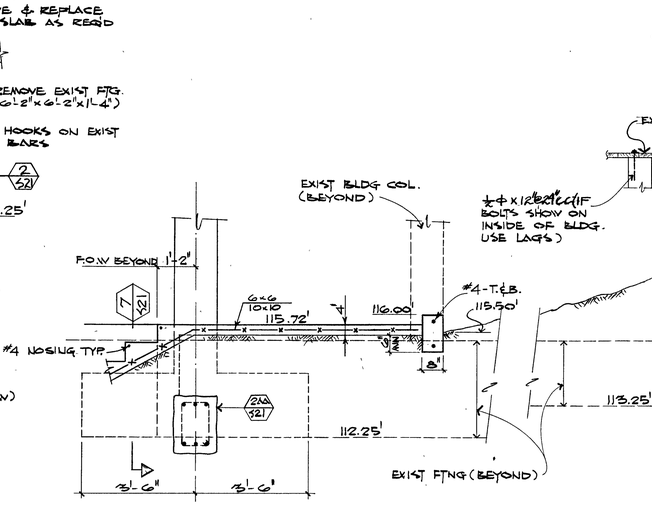

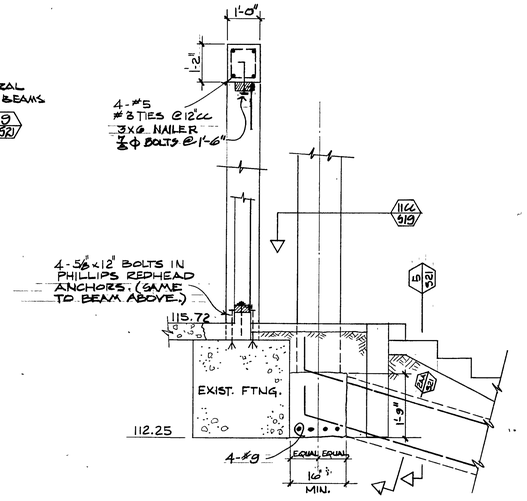

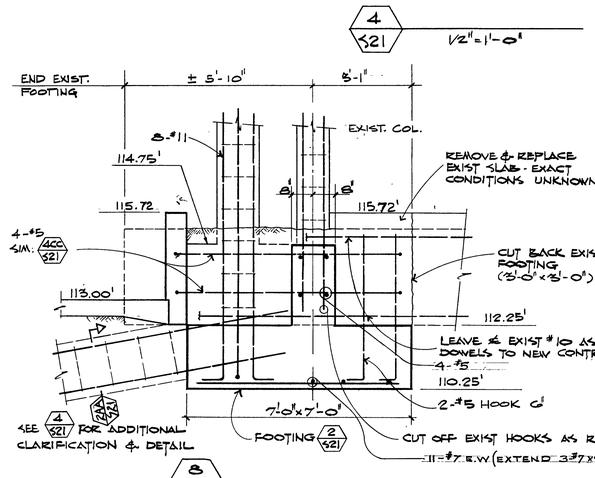

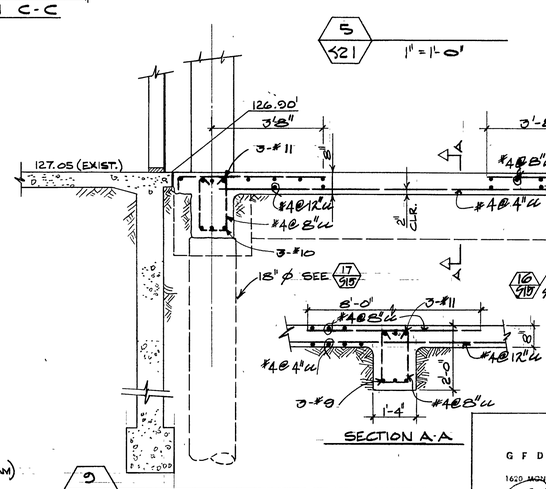

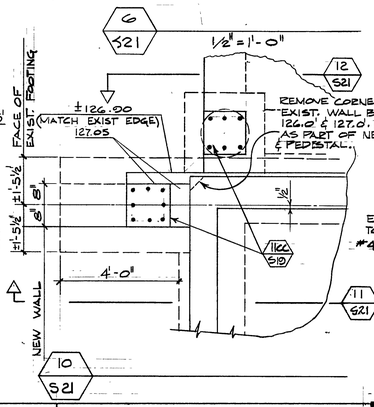

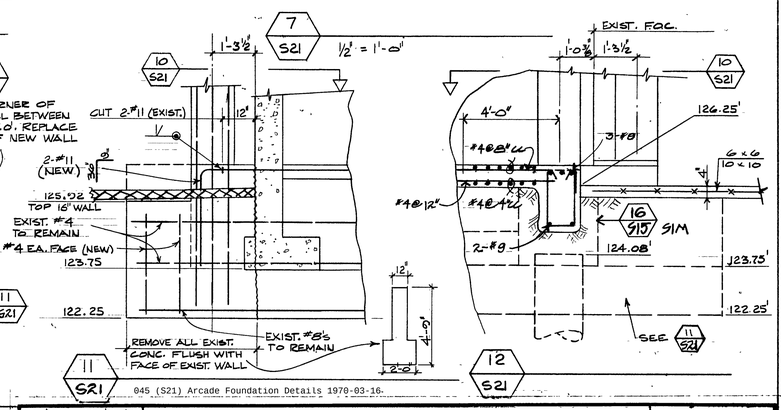

045 (S21) Arcade Foundation Details 1970-03-16.

GFDS ENGINEERS
CIVIL & STRUCTURAL ENGINEERS
1620 MONTGOMERY ST., SAN FRANCISCO, CALIFORNIA
Edward Fleishmann SE1827

ARCADE FOUNDATION DETAILS

DATE: 16 MAR '70
As built

COLLEGE UNION
HUMBOLDT STATE COLLEGE, ARCATA, CALIFORNIA

TRUMP AND SAUBLE, MARVIN TRUMP, ARCHITECT, A.I.A.
202 M STREET EUREKA, CALIFORNIA 95501 TEL. 707-442-1554

S21

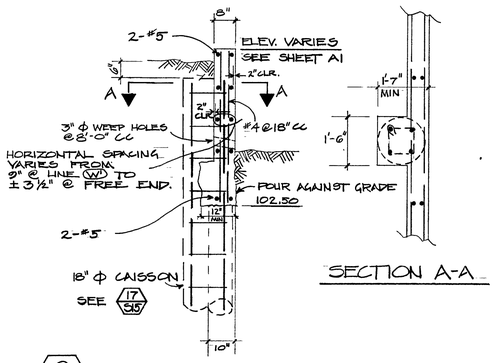

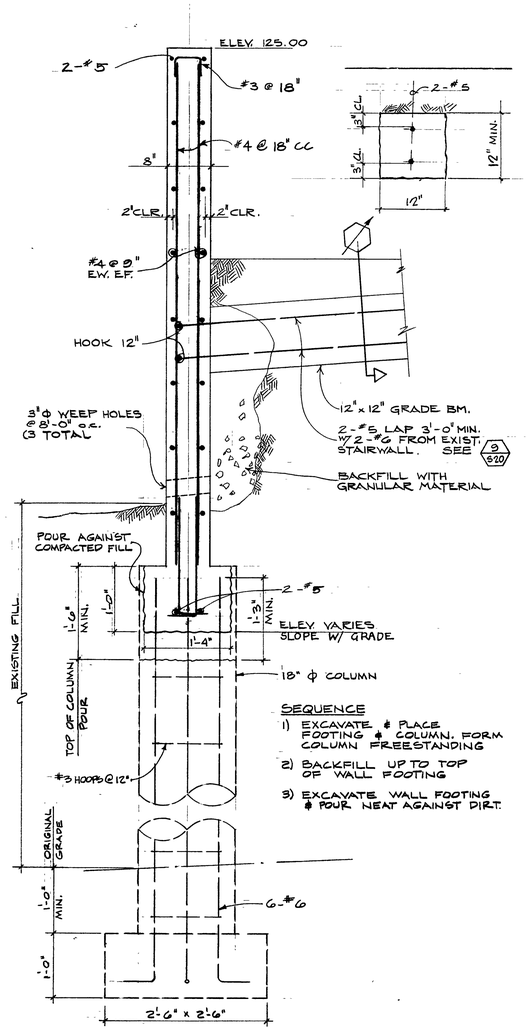

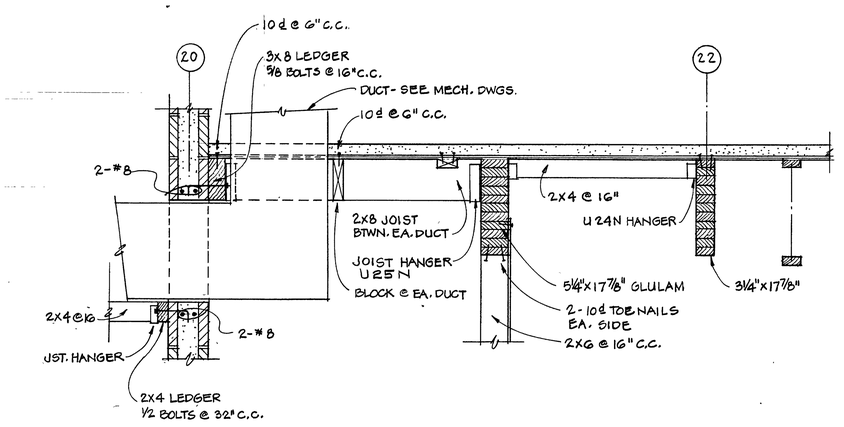

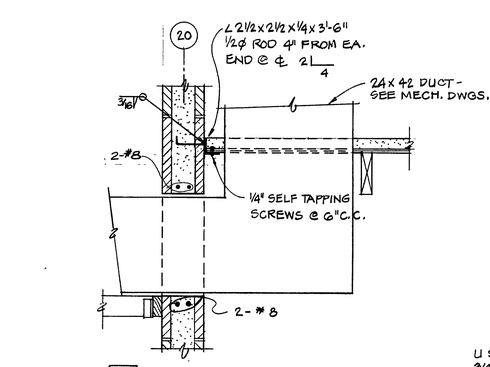

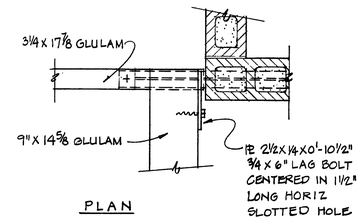

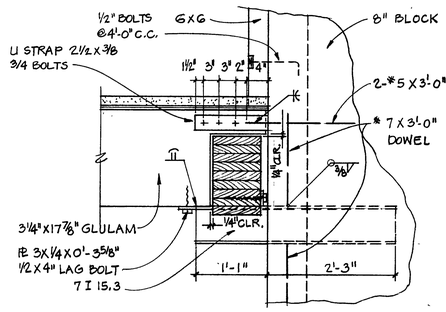

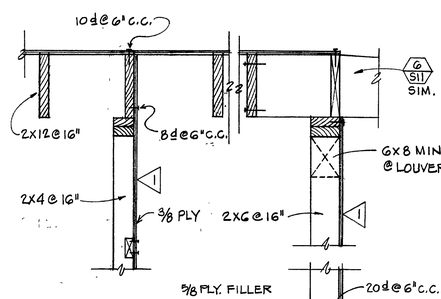

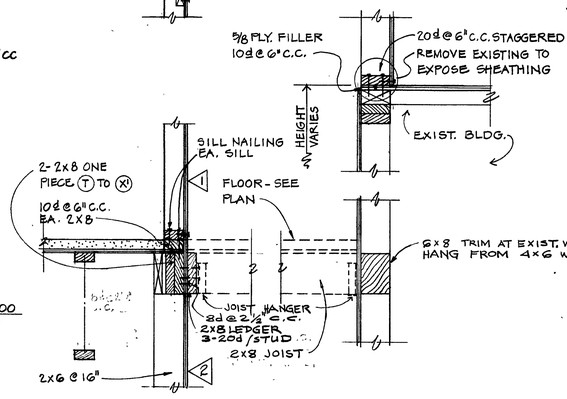

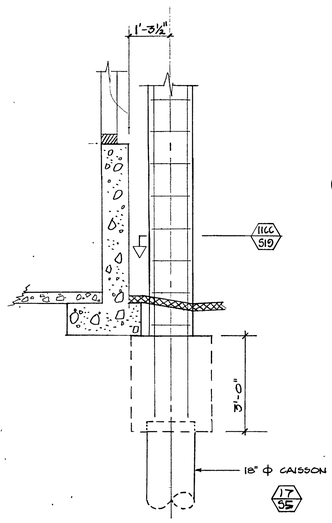

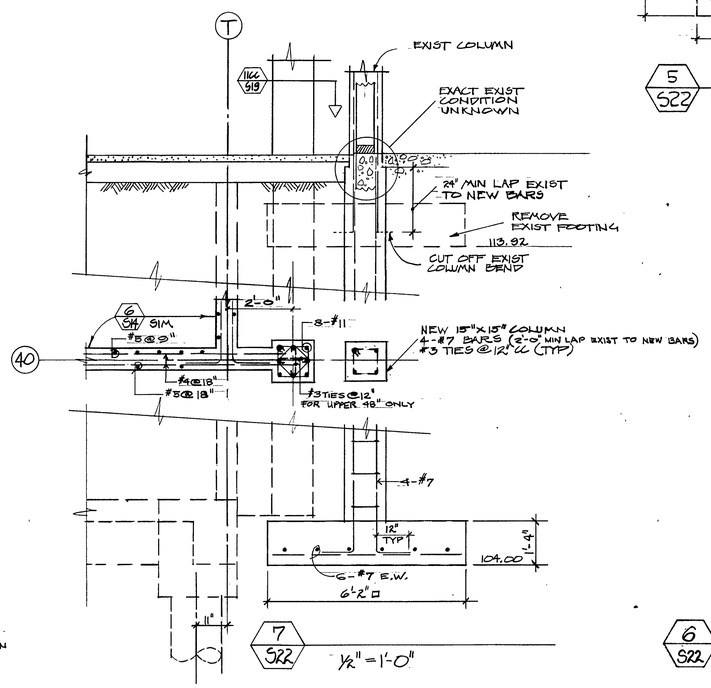

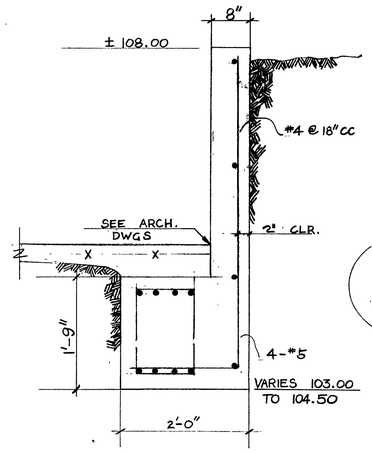

945 (S22) Miscellaneous Details 1970-03-16

GFDS ENGINEERS CIVIL & STRUCTURAL ENGINEERS 1620 MONTGOMERY ST., SAN FRANCISCO, CALIFORNIA Edward Sauerbrunn SE/1327	MISCELLANEOUS DETAILS	DATE: 16 MAR '70 As built	COLLEGE UNION HUMBOLDT STATE COLLEGE, ARCATA, CALIFORNIA TRUMP AND SAUBLE, MARVIN TRUMP, ARCHITECT, A.I.A. 202 M STREET EUREKA, CALIFORNIA 95501 TEL. 707-442-1554	S22